HB 287
NW Energy

Slide 1:

Utility R.O.W./Easement

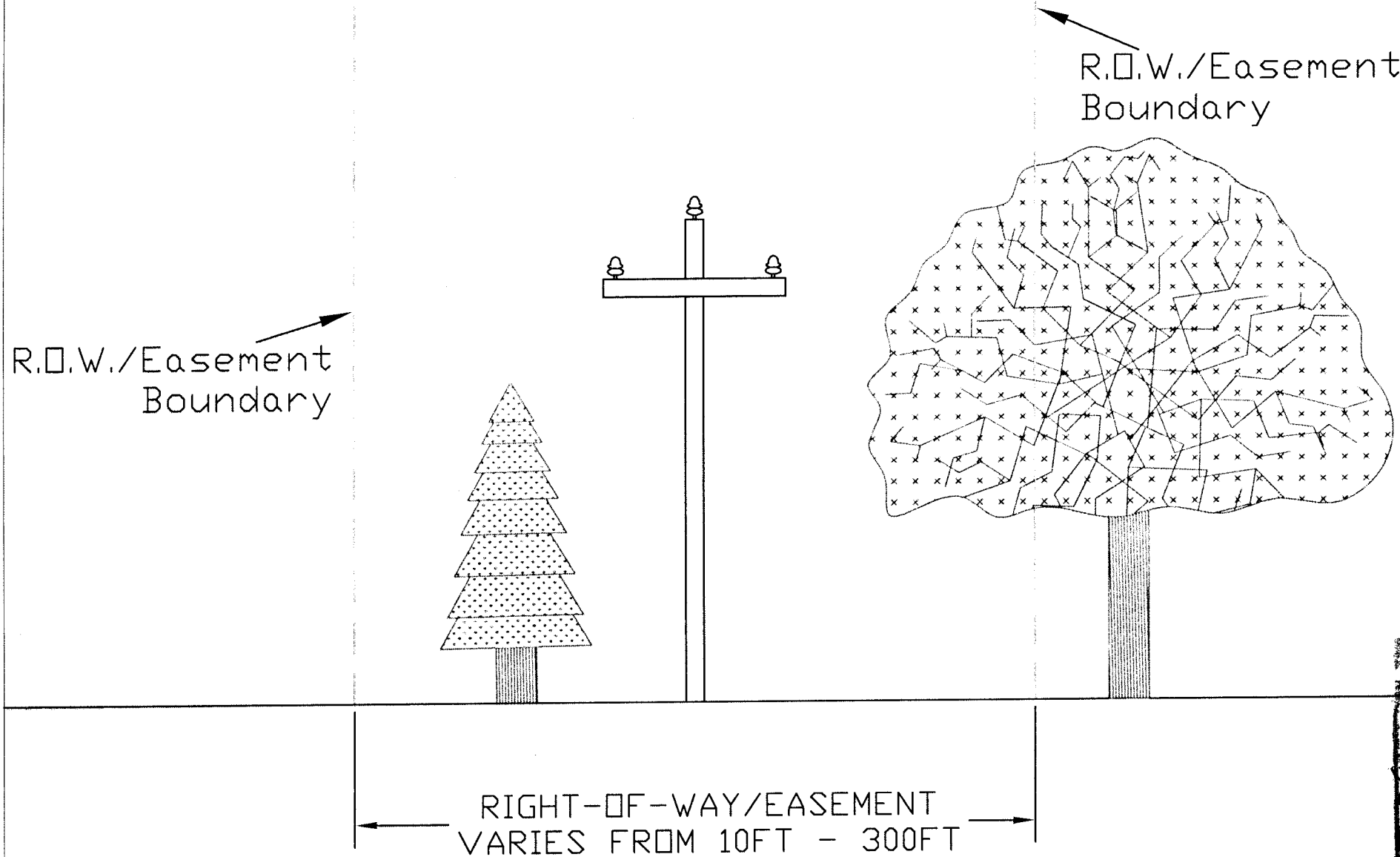

SENATE JUDICIARY
EXHIBIT NO. 5
DATE 3/3/09
BILL NO. HB 287

Slide 2:

Tree on Powerline
Removal Mandatory
Covered by H.B. 287

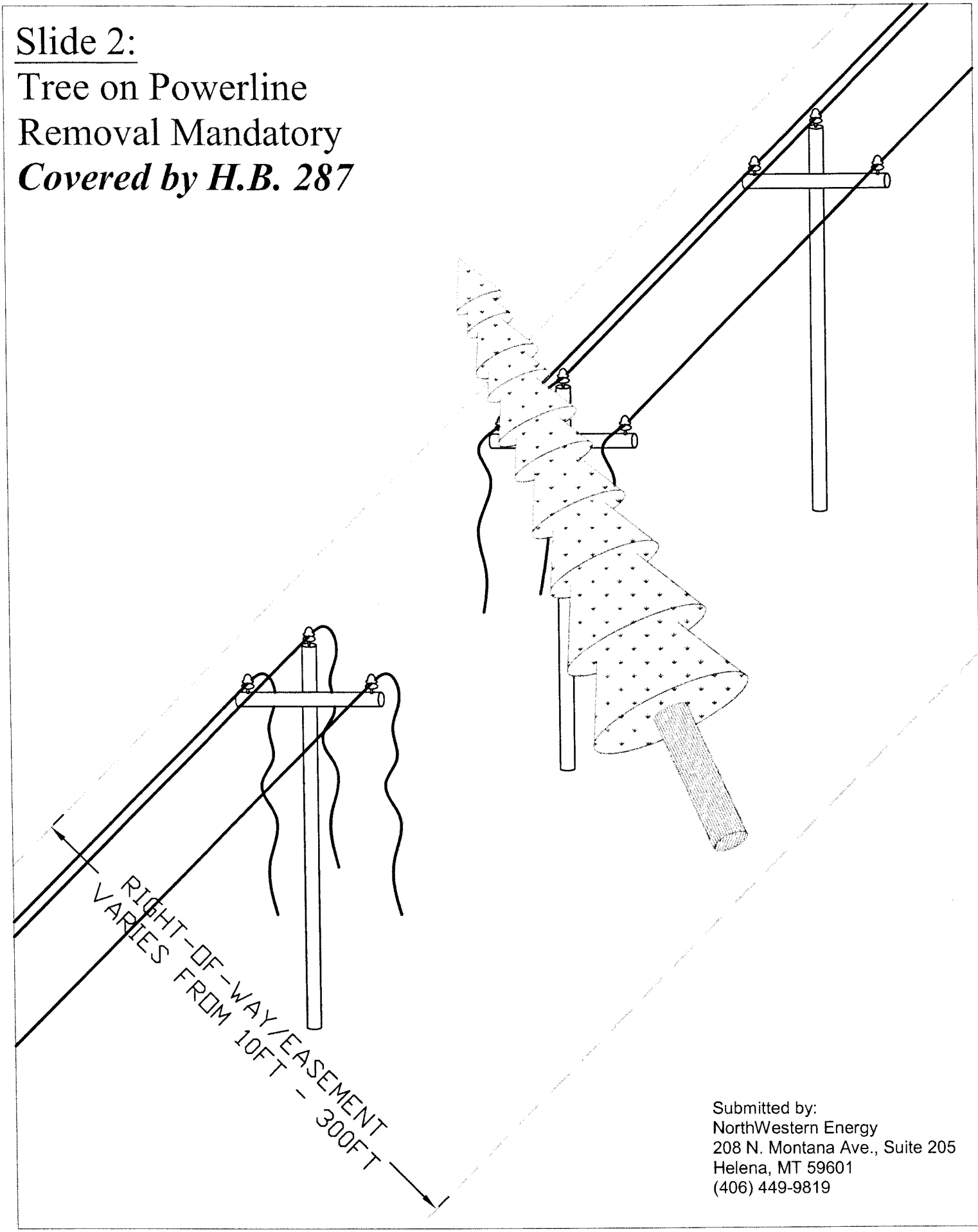

Submitted by:
NorthWestern Energy
208 N. Montana Ave., Suite 205
Helena, MT 59601
(406) 449-9819

Slide 3:

Danger Trees within R/W Require Removal/Maintenance

Covered by H.B. 287

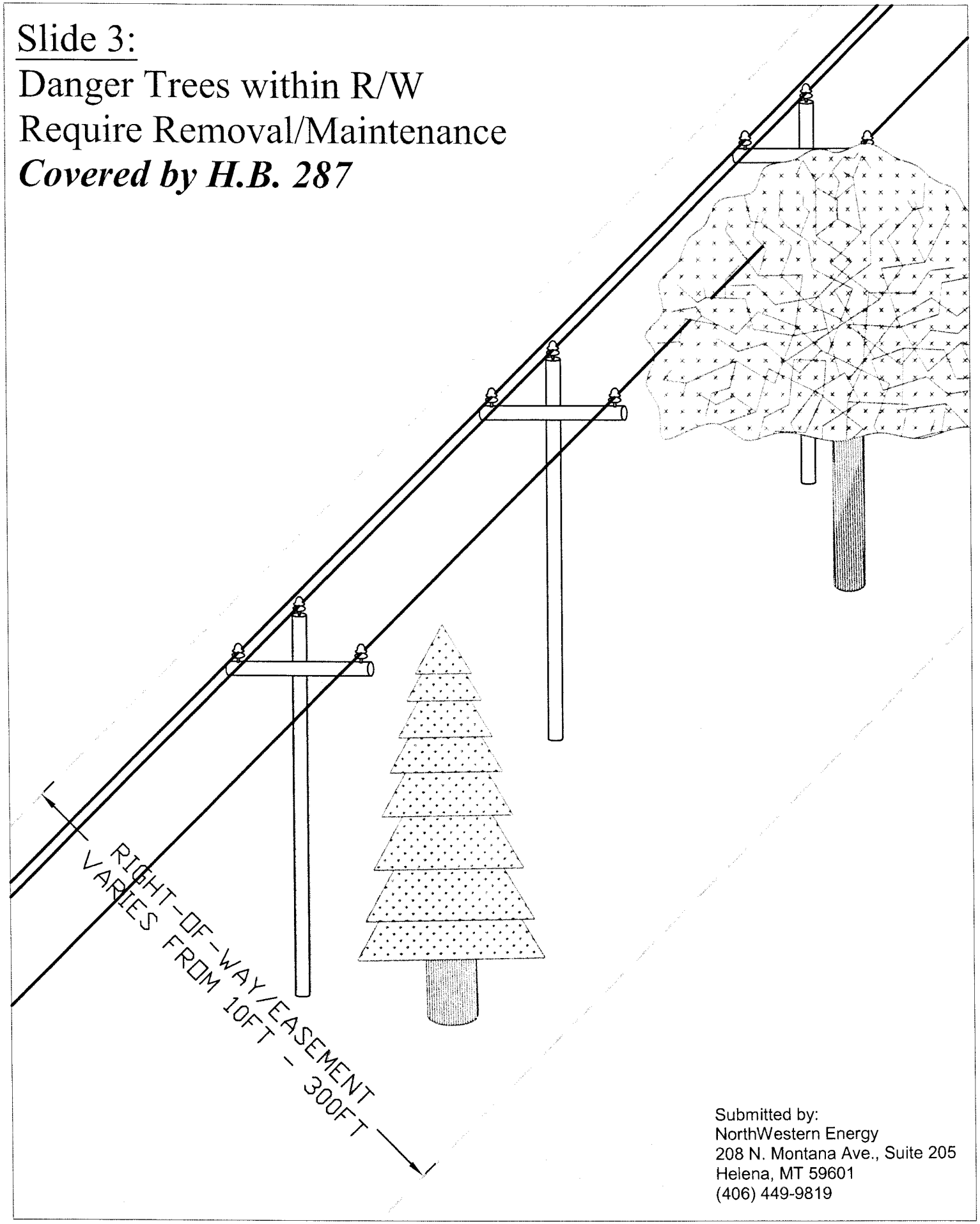

Submitted by:
NorthWestern Energy
208 N. Montana Ave., Suite 205
Helena, MT 59601
(406) 449-9819

Slide 4:

Danger Tree outside R/W Threatens Powerline

NOT Covered by H.B. 287

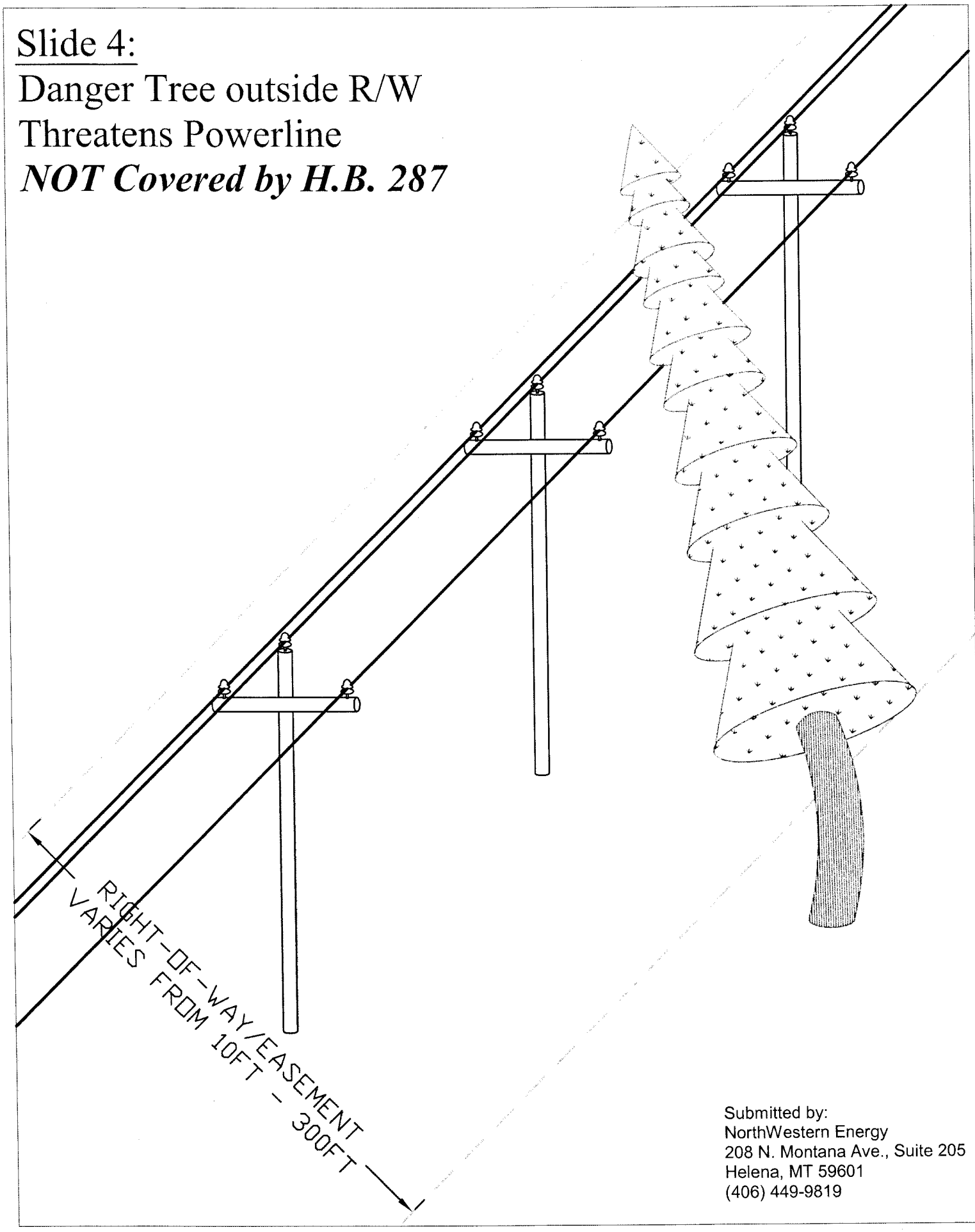

Submitted by:
NorthWestern Energy
208 N. Montana Ave., Suite 205
Helena, MT 59601
(406) 449-9819