Deadman's Basin Terminal Outlet Replacement Project

Draft MEPA Environmental Assessment

Deadman's Basin Dam Crest – looking North

MT DNRC, State Water Projects Bureau

April 2009

Table of Contents

Page 2 **Part I. Proposed Action Description**
Type of Proposed State Action
Agency Authority
Page 3 **Project Name**
Project Sponsor
Construction Timeline
Project Location
Project Size
Page 4 **Project Map**
Page 5 **Agencies with Overlapping or Additional Jurisdiction**
Permits Needed
Project Funding
Page 6 **Narrative Summary**
Page 7 **Project Photographs**
Page 11 **Part II. Environmental Review**
No Action Alternative
Proposed Action / Preferred Alternative
Evaluation and Listing of Mitigation
Page 12 **Part III. Public Participation**
Part IV. EA Preparation
Page 13 **Part V. Environmental Review Checklist**
A. Physical Environment – Land Resources
Page 14 **Air**
Page 15 **Water**
Page 16 **Vegetation**
Page 17 **Fish / Wildlife**
Page 18 **B. Human Environment – Noise / Electrical Effects**
Page 19 **Land Use**
Page 20 **Risk / Health Hazards**
Page 21 **Community Impact**
Page 22 **Public Services / Taxes / Utilities**
Page 23 **Aesthetics / Recreation**
Page 24 **Cultural / Historical Resources**
Page 25 **C. Significance Criteria**
Part VI. Narrative Evaluation and Comment
Page 26 **References**
Page 27 **List of Preparers**
Page 28 **Appendix A: Location Map, Design Drawings**

List of Acronyms and Abbreviations

COE……..U.S. Army Corps of Engineers
DBWUA ..... Deadman's Basin Water Users Association
DEQ ..... Montana Department of Environmental Quality
DFWP ..... Montana Department of Fish, Wildlife, and Parks
DNRC ..... Montana Department of Natural Resources and Conservation
EA ..... Environmental Assessment
EIS ..... Environmental Impact Statement
MCA…… Montana Code Annotated
MEPA..... Montana Environmental Policy Act
NHP ..... Montana Natural Heritage Program
RRGL……...Renewable Resource Grant and Loan Program
SHPO..... Montana State Historic Preservation Office
SWPB ..... State Water Projects Bureau

Deadman's Basin Terminal Outlet Replacement Project: Draft Environmental Assessment and MEPA Checklist

PART I. PROPOSED ACTION DESCRIPTION

1. Type of proposed state action:

The DNRC proposes to construct a toe berm along the downstream side of the existing embankment, place sand filters, and extend the outlet conduit to control excessive seepage. Seepage has been observed around the top of the existing outlet structure, through exposed fractured bedrock downstream of the outlet and along the toe north of the outlet. In 2003, the DNRC performed a seepage modeling study of the dam. The seepage modeling report documents high uplift pressures at the dam toe, resulting in unsatisfactory factors of safety. Deadman's Basin Dam is classified by the Montana Dam Safety Act as a high hazard dam, which means there is a potential for loss of life in the event of a failure.

2. Agency authority for the proposed action:

The Montana Legislature enacted statute 85-1- 101(1) through (6) MCA, which states: "It is hereby declared as follows:

(1) The general welfare of the people of Montana, in view of the state's population growth and expanding economy, requires that water resources of the state be put to optimum beneficial use and not wasted.

(2) The public policy of the state is to promote the conservation, development, and beneficial use of the state's water resources to secure maximum economic and social prosperity for its citizens.

(3) The state, in the exercise of its sovereign power, acting through the Department of Natural Resources and Conservation, shall coordinate the development and use of the water resources of the state so as to effect full utilization, conservation, and protection of its water resources.

(4) The development and utilization of water resources and the efficient, economic distribution thereof are vital to the people in order to protect existing uses and to assure adequate future supplies for domestic, industrial, agricultural, and other beneficial uses.

(5) The water resources of the state must be protected and conserved to assure adequate supplies for public recreational purposes and for the conservation of wildlife and aquatic life.

(6) The public interest requires the construction, operation, and maintenance of a system of works for the conservation, development, storage, distribution, and utilization of water, which construction, operation, and maintenance is a single object and is in all respects for the welfare and benefit of the people of the state.

Name of project: Deadman's Basin Terminal Outlet Replacement Project

3. Name, address phone number of project sponsor :

State Water Projects Bureau, MT. Dept. of Natural Resources & Conservation, 1424 9th Ave., P.O. Box 201601, Helena, MT 59620–1601 (406) 444-6646

4. Construction Timeline:

Estimated Commencement Date: October 2009
Estimated Completion Date: March 2010
Current Status of Project Design (% complete) 65%

5. Location affected by proposed action (county, range and township):

The dam is located north of U.S. Highway 12 in Section 25, Township 7 North, Range18 East in Wheatland County approximately 22 miles east of Harlowton, Montana. The land where the dam and reservoir are located is owned by the DNRC. Private land exists along the east shore of the reservoir south of the dam, where numerous vacation cabins and lake homes are located. (Figure 1) The 29 acre construction zone is delineated in Figure 2.

6. Project size -- estimate the number of acres that would be directly affected that are currently:

	Acres		Acres
(a) Developed:		(d) Floodplain	0
Residential	0		
Industrial	0	(e) Productive:	
		Irrigated cropland	0
(b) Open Space/Woodlands/Recreation	0	Dry cropland	0
		Forestry	0
(c) Wetlands/Riparian Areas	0	Rangeland	0
		Other (dam, dike and immediate surrounding area	29

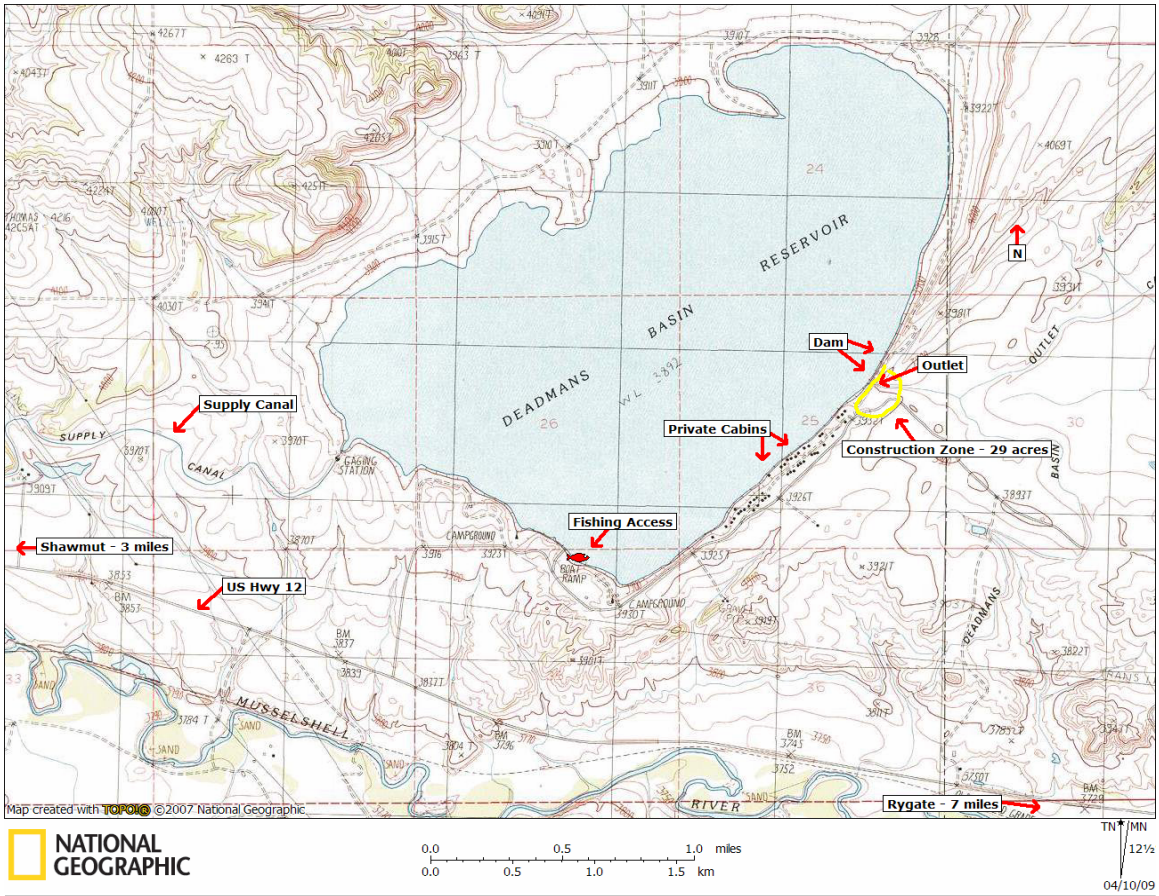

Figure 1.

Figure 2.

7. Listing of any other Local, State or Federal agency that has overlapping or additional jurisdiction.

(a) Permits: All permits will be obtained prior to applicable project construction.

The following permits would be needed:

Agency Name	Permit	Status
MT DEQ	Stormwater Permit	Pending
MT DNRC	Dam Safety Permit	Pending
MT State Historic Preservation Office	Cultural Clearance	Pending

(b) Funding: The project is funded entirely with DNRC revenue, as detailed below.

Funding Source	Amount
DNRC RRGL Grant	$100,000
DNRC RRGL Loan	$400,000
DNRC Water Storage Account	$514,500
DNRC In-Kind Services	$ 63,352
Est. Total Cost	$1,077,852

(c) Other Overlapping or Additional Jurisdictional Responsibilities:

Agency Name	Type of Responsibility
State Historic Preservation Office	Cultural Resource Protection

8. Narrative summary of the proposed action or project including the benefits and purpose of the proposed action:

Deadman's Basin Dam is an off-stream storage project located in Wheatland County, approximately 9 miles west of Ryegate, Montana (location map is available in Appendix A). The dam is owned by the Montana Department of Natural Resources and Conservation and operated and maintained by the Deadman's Basin Water Users Association. The dam was completed in 1941 and raised 10 feet in 1958. The earthfill dam is 60 feet high, has a crest length of 1,490 feet, and impounds 72,218 acre-feet of water at full pool.

Water stored in Deadman's Basin Reservoir is used for irrigation by approximately 160 family farmers and ranchers. A large percentage of Musselshell River flow relies on water releases from the Deadman's Basin Reservoir and the towns of Melstone, Ryegate, and Roundup utilize water from the river for municipal water systems. In total, four hundred ninety (490) families, including ranchers, farmers, and residents of small towns, directly depend on receiving contracted water shares from the Deadman's Basin Water Project. The reservoir is also a popular recreation area. A DFWP fishing access and campground are located along the northeast shore. Numerous private cabins and lake homes are located immediately south of the dam along the reservoir's east shore

Annual inspections have reported seepage overtopping the outlet structure, erosion of material behind the outlet, excessive seepage and standing water on the downstream side of the dam, and deterioration of the outlet structure. A relief ditch installed in the 1980s to alleviate the standing water has head-cut over the years and is now a possible route of soil piping, which can threaten the structural integrity of the embankment. The exit gradient of the seepage at the downstream toe of the dam has a factor of safety below that required by Montana dam safety standards. Deadman's Basin Dam is classified as a high hazard dam. A dam is classified as high hazard if failure would endanger lives and property downstream.

Project Goals:

a. The overriding goal of this project is to maintain Deadman's Basin Dam in a safe condition for its continued use for agricultural irrigation, municipal water, fisheries, wildlife and recreational resources.

b. Minimize the state's liability by inspecting, repairing, maintaining, and rehabilitating DNRC and DFWP water projects. (85-1-101, 85-1-206, 85-1-211, 85-1-219, MCA).

c. Fulfill the DNRC Water Resources Division mission by protecting existing water use and promoting adequate future supplies for agriculture, recreation, and the conservation of water for wildlife and fisheries resources.

Project Objectives:

1. Remove the outlet structure, extend the conduit, and install a drainage system along side the new conduit extension.
2. Build a new energy dissipating outlet.
3. Build a 15 foot high toe berm with a filter blanket drain to control seepage.

The conduit extension will allow several seepage outcrops that appear in the outlet channel to be terminated in a fine filter and then into a collection pipe. This will prevent any piping from occurring and allow regular monitoring of seepage flows. The outlet conduit concrete is also generally in poor condition and needs to be replaced.

The project as proposed would significantly reduce the potential for loss of life from structural failure of the outlet and embankment. The project addresses a potentially serious structural problem and enhances the overall stability and safety of a designated high-hazard dam. Sustaining the area's economy, providing municipal water, irrigation and stock water, protecting fisheries resources, wildlife habitat, and recreational use would be other important benefits.

The Montana Department of Environmental Quality, State Historic Preservation Office and Natural Heritage Program have been contacted concerning potential impacts to water resources, historic resources and the presence of any species of special concern within the vicinity of the proposed project, respectively. Montana Fish, Wildlife and Parks were consulted concerning potential impacts to fish, wildlife and recreational resources. The Corps of Engineers was also contacted on 404 permitting requirements. The DNRC Water Operations Bureau has been consulted concerning the Dam Safety Permit. The project will not cause any significant or long-term, permanent adverse impacts to the environment. The design plans are provided in Appendix A.

Project Photographs:

Downstream dam face, eroded area on left.

Upstream dam face looking south. Private cabins/lake homes in the distance.

Outlet Canal.

Outlet Terminal Structure.

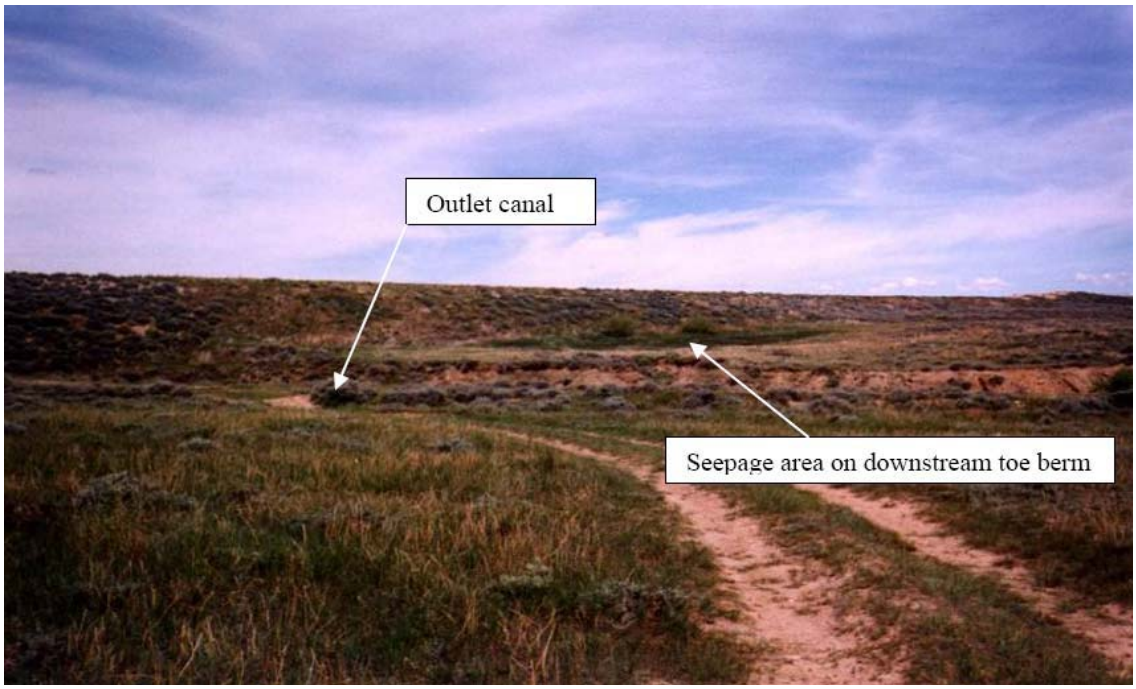

Downstream Dam Face – Construction Zone

Seepage in the Outlet Terminal Structure Wall.

Gate Tower.

PART II. ENVIRONMENTAL REVIEW

1. Description and analysis of reasonable alternatives (including the no action alternative) to the proposed action whenever alternatives are reasonably available and prudent to consider and a discussion of how the alternatives would be implemented:

Alternative A: No Action

The no action alternative would result in the continuation of a potentially unsafe condition at a designated high hazard dam. Failure to address the excessive seepage could affect the dam's safe operation. This in turn could affect the structure's integrity and increase the risk to the public and property downstream. This risk would increase overtime. In addition, the supply of irrigation water could be negatively affected, resulting in potentially severe economic hardship to the area's agricultural economy. Recreational and downstream municipal use would be negatively affected and fisheries and wildlife resources associated with the reservoir would be harmed.

Alternative B: Proposed Action / Preferred Alternative

The proposed rehabilitation includes the replacement of the outlet terminal structure, installation of a new drain system and placement of a toe berm to protect against high artesian pressures. The repair work and improvements will enhance dam safety and longevity and promote effective water conservation for irrigation needs. The repairs would bring the dam up to current state dam safety standards. Protecting the areas agricultural based economy, providing irrigation and stock water, protecting fisheries resources, wildlife habitat, municipal and recreational use would be achieved under this alternative. Design drawings and maps are provided in Appendix A.

2. Evaluation, listing of mitigation, stipulation, or other control measures enforceable by the agency or other government agency:

Other than the requirements associated with the permits mentioned in Section 7(a) on page 5 of this report, there are no formal stipulations of mitigation or other controls associated with the proposed action. This action does not involve any permanent or long-term permits or granting of a license on which stipulations would be placed.

PART III. PUBLIC PARTICIPATION

1. **Describe the level of public involvement for this project if any, and, given the complexity and the seriousness of the environmental issues associated with the proposed action, is the level of public involvement appropriate under the circumstances?**

   The public will be notified by way of a public notice on DNRC web page at **www.dnrc.mt.gov** . Individual notices will be sent to the State Water Projects Bureau standard EA distribution list (as presented on the cover page of this EA) and to those that have requested a copy.

   Duration of comment period:

   A 30-day comment period is proposed. This level of public involvement is appropriate for the scale and scope of the proposed action. Opening and closing dates for comments are provided on the EA cover letter and distribution list.

PART IV. EA PREPARATION

1. **Based on the significance criteria evaluated in this EA, is an EIS required? If an EIS is not required, explain why the EA is the appropriate level of analysis for this proposed action.**

   Based on an evaluation of the primary, secondary, and cumulative impacts to the physical and human environment under the Montana Environmental Protection Act (MEPA), this environmental review found no significant impacts from the proposed action. In determining the significance of the impacts, the DNRC assessed the severity, duration, geographic extent, and frequency of the impact, the probability that the impact would occur or reasonable assurance that the impact would not occur, growth-inducing or growth inhibiting aspects of the impact, the importance to the state and to society of the environmental resource or value affected, and precedent that would be set as a result of the proposed action that would commit the DNRC to future actions; and potential conflicts with local, state or federal laws. Therefore, an EA is the appropriate level of review and an EIS is not required.

2. **Name, title, address and phone number of the person(s) responsible for preparing the EA:**

   James P. Domino
   Environmental Science Specialist
   State Water Projects Bureau
   Montana Department of Natural Resources and Conservation
   1424 9th Avenue, P.O. Box 201601
   Helena, MT 59620-1601
   (406) 444-6622, e-mail jdomino@mt.gov

3. List of agencies consulted during preparation of the EA:

Montana Department of Fish, Wildlife & Parks
Montana State Historic Preservation Office
Montana Natural Heritage Program – Natural Resources Information System
Montana Department of Environmental Quality
Montana Department of Natural Resources and Conservation, Water Operations Bureau, Dam Safety Section
U.S. Army Corps of Engineers

PART V. ENVIRONMENTAL REVIEW CHECKLIST

4. Evaluation of the impacts of the Proposed Action including secondary and cumulative impacts on the Physical and Human Environment.

A. PHYSICAL ENVIRONMENT

1. LAND RESOURCES Will the proposed action result in:	IMPACT *				Can Impact Be Mitigated *	Comment Index
	Unknown *	None	Minor *	Potentially Significant		
a. **Soil instability or changes in geologic substructure?		X				.
b. Disruption, displacement, erosion, compaction, moisture loss, or over-covering of soil, which would reduce productivity or fertility?			X			1b.
c. **Destruction, covering or modification of any unique geologic or physical features?		X				
d. Changes in siltation, deposition or erosion patterns that may modify the channel of a river or stream or the bed or shore of a lake?			X			1d.
e. Exposure of people or property to earthquakes, landslides, ground failure, or other natural hazard?		X				
f. Other:		X				

Narrative Description and Evaluation of the Cumulative and Secondary Effects on Land Resources:

1b. Soil would be disturbed during the excavation and construction process, which will cause some erosion, compaction, and loss of soil over-covering. Approximately 50,000 cubic yards of material will be utilized in the construction, with the construction disturbance zone encompassing approximately 29 acres. The effects would be temporary, minor and non-significant. All disturbed areas would be Reclaimed and reseeded upon project completion.

1d.) The downstream face of the dam and outlet structure area will be modified to allow for construction access and the installation of the drains, toe berm and new terminal outlet structure. Impacts associated with the proposed alternative are considered minor and non-significant in the short and long-term. All disturbed areas would be reclaimed and reseeded upon project completion.

2. AIR Will the proposed action result in:	IMPACT *				Can Impact Be Mitigated *	Comment Index
	Unknown *	None	Minor *	Potentially Significant		
a. **Emission of air pollutants or deterioration of ambient air quality? (Also see 13 (c).)			X			2a.
b. Creation of objectionable odors?		X				.
c. Alteration of air movement, moisture, or temperature patterns or any change in climate, either locally or regionally?		X				
d. Other:		X				

Narrative Description and Evaluation of the Cumulative and Secondary Effects on Air Resources (attach additional pages of narrative if needed):

2a. Minor and temporary dust and vehicle emissions would be created by equipment during construction. The effect would be non-significant and end with the completion of the project.

3. **WATER** **Will the proposed action result in:**	**IMPACT ∗**				**Can Impact Be Mitigated∗**	**Comment Index**
	Unknown ∗	**None**	**Minor ∗**	**Potentially Significant**		
a. ∗Discharge into surface water or any alteration of surface water quality including but not limited to temperature, dissolved oxygen or turbidity?		X				3a.
b. Changes in drainage patterns or the rate and amount of surface runoff?		X				
c. Alteration of the course or magnitude of floodwater or other flows?		X				
d. Changes in the amount of surface water in any water body or creation of a new water body?			X			3d.
e. Exposure of people or property to water related hazards such as flooding?		X				
f. Changes in the quality of groundwater?		X				
g. Changes in the quantity of groundwater?		X				
h. Increase in risk of contamination of surface or groundwater?			X			3h.
i. Effects on any existing water right or reservation?		X				
j. Effects on other water users as a result of any alteration in surface or groundwater quality?		X				
k. Effects on other users as a result of any alteration in surface or groundwater quantity?			X			3k.
l. Other:			X			3l.

Narrative Description and Evaluation of the Cumulative and Secondary Effects on Water Resources:

3a. The proposed action should not cause any increases in turbidity. It is not anticipated that sediments would enter the reservoir, outlet canal or the Musselshell River, as the outlet canal would be dry and the operating gate closed for the duration of the project, with all work performed on the downstream side of the dam.

3d.) The reservoir would be lowered to approximately the minimum winter storage (21,940 acre-feet, elevation 3,892.6) for the duration of the project. The reservoir would begin filling and return to normal operations upon project completion, tentatively scheduled for March 2010. The changes in the amount of surface water are temporary, non-significant and would end upon completion of the project.

3h. The risk of water contamination exists due to heavy equipment use in the area around the dam, dike and outlet canal. This impact is minor, temporary, and non-significant and would end with the completion of the project. The risk would be mitigated by insuring that all equipment is properly maintained with no fluid leaks. Construction equipment refueling would take place at an off-site location away from the dam, reservoir and canal.

3k.) Downstream water users would benefit by the continued availability of water for irrigation, municipal uses, fisheries, wildlife and recreational resources.

3l.) Anglers and recreationists could be impacted due to lower than normal water levels at the end of the summer season. This effect is temporary and considered non-significant. Refilling the reservoir will begin upon project completion.

All these effects would be short-term and end with the normal filling of the reservoir, which would begin in the spring of 2010 (contingent upon the return of normal or near normal precipitation patters for the region). No long-term significant impacts are anticipated to water quality or quantity, downstream water users, recreationists, municipal uses, anglers or to fisheries and wildlife habitat as a result of the proposed alternative.

4. VEGETATION Will the proposed action result in?	IMPACT *				Can Impact Be Mitigated *	Comment Index
	Unknown *	None	Minor *	Potentially Significant		
a. Changes in the diversity, productivity or abundance of plant species (including trees, shrubs, grass, crops, and aquatic plants)?		X				
b. Alteration of a plant community?			X			4b.
c. Adverse effects on any unique, rare, threatened, or endangered species?		X				4c.
d. Reduction in acreage or productivity of any agricultural land?		X				
e. Establishment or spread of noxious weeds?			X			4e.
f. Other:		X				

Narrative Description and Evaluation of the Cumulative and Secondary Effects on Vegetation (attach additional pages of narrative if needed):4a.

4b. Some native grasses, sage, trees and shrubs would be disturbed from the excavation and construction. The impacts would be non-significant and minor and are negligible due to the reclamation and reseeding of the disturbed area.

4c. There are no documented observations of any threatened or endangered plants, or plant species of special concern within the proposed project site.

4e. An increase in noxious weeds may occur due to soil disturbance and equipment operation. Effects are negligible in the long-term because of reclamation and weed control implementation.

** 5. FISH/WILDLIFE Will the proposed action result in:	IMPACT *				Can Impact Be Mitigated *	Comment Index
	Unknown *	None	Minor *	Potentially Significant		
a. Deterioration of critical fish or wildlife habitat?		X				5a.
b. Changes in the diversity or abundance of game animals or bird species?		X				
c. Changes in the diversity or abundance of non-game species?		X				
d. Introduction of new species into an area?		X				
e. Creation of a barrier to the migration or movement of animals?		X				
f. Adverse effects on any unique, rare, threatened, or endangered species?		X				5f.
g. Increase in conditions that stress wildlife populations or limit abundance (including harassment, legal or illegal harvest or other human activity)?			X			5g.
h. Other:		X				

Narrative Description and Evaluation of the Cumulative and Secondary effects on Fish and Wildlife (attach additional pages of narrative if needed):

5a.) The drawdown of the reservoir to 21,940 acre-feet should not adversely affect the existing stocked reservoir fisheries.

5f.) A file search was conducted by the Natural Heritage Program. Four species of special concern are known to exist in the project area: One, Brewer's Sparrow; two, Spiny Soft-shell; three, Greater Sage Grouse and four, Loggerhead Shrike. No threatened or endangered species were listed. It is not anticipated that the proposed action would significantly impact any of the listed species, or any other wildlife or fish species. Local wildlife would most likely avoid the construction zone. This temporary impact would end upon project completion.

5g.) Local wildlife within the immediate vicinity of the project location (e.g. mule and whitetail deer, antelope, raptors, waterfowl, song birds) would experience a temporary increase in stress due to the construction activity. The wildlife would most likely avoid the immediate work site during construction. This impact would be minor, non-significant and end upon project completion.

B. HUMAN ENVIRONMENT

6. NOISE/ELECTRICAL EFFECTS Will the proposed action result in:	IMPACT *				Can Impact Be Mitigated *	Comment Index
	Unknown *	None	Minor *	Potentially Significant		
a. Increases in existing noise levels?			X			6a.
b. Exposure of people to serve or nuisance noise levels?			X			6b.
c. Creation of electrostatic or electromagnetic effects that could be detrimental to human health or property?		X				
d. Interference with radio or television reception and operation?		X				
e. Other:		X				

Narrative Description and Evaluation of the Cumulative and Secondary Effects on Noise/Electrical Effects (attach additional pages of narrative if needed):

6a & b. There will be a temporary increase in noise levels during construction. This would end after completion of the construction activity. Lake homes, cabins and residences adjacent to the site may be disturbed by the activity. The impacts would be temporary, minor and non-significant. The actual construction activity would begin in October and be completed by March, which is outside the main recreational use season of May through September.

7. LAND USE Will the proposed action result in:	IMPACT *				Can Impact Be Mitigated *	Comment Index
	Unknown *	None	Minor *	Potentially Significant		
a. Alteration of or interference with the productivity or profitability of the existing land use of an area?		X				
b. Conflict with a designated natural area or area of unusual scientific or educational importance?		X				
c. Conflict with any existing land use whose presence would constrain or potentially prohibit the proposed action?		X				
d. Adverse effects on or relocation of residences?		X				
e. Increase regulatory restrictions on private property?		X				
f. Other:		X				

Narrative Description and Evaluation of the Cumulative and Secondary Effects on Land Use (attach additional pages of narrative if needed):

8. RISK/HEALTH HAZARDS Will the proposed action result in:	IMPACT *				Can Impact Be Mitigated *	Comment Index
	Unknown *	None	Minor *	Potentially Significant		
a. Risk of an explosion or release of hazardous substances (including, but not limited to oil, pesticides, chemicals, or radiation) in the event of an accident or other forms of disruption?		X				
b. Affect an existing emergency response or emergency evacuation plan, or create a need for a new plan?		X				
c. Creation of any human health hazard or potential hazard?		X				
d. Other:		X				

Narrative Description and Evaluation of the Cumulative and Secondary Effects on Risk/Health Hazards (attach additional pages of narrative if needed):

9. COMMUNITY IMPACT Will the proposed action result in:	IMPACT *				Can Impact Be Mitigated *	Comment Index
	Unknown *	None	Minor *	Potentially Significant		
a. Alteration of the location, distribution, density, or growth rate of the human population of an area?		X				
b. Alteration of the social structure of a community?		X				
c. Alteration of the level or distribution of employment or community or personal income?		X				
d. Changes in industrial or commercial activity?		X				
e. Increased traffic hazards or effects on existing transportation facilities or patterns of movement of people and goods?			X			9e.
f. Other:		X				

Narrative Description and Evaluation of the Cumulative and Secondary Effects on Community Impact (attach additional pages of narrative if needed):

9e. There would be a temporary increase in construction related traffic along the main reservoir access road and US Highway 12. Warning signs would be placed to warn drivers of the increased construction related activity. This impact would be minor, temporary, non-significant and would end upon project completion.

10. PUBLIC SERVICES/TAXES/UTILITIES Will the proposed action result in:	IMPACT *				Can Impact Be Mitigated *	Comment Index
	Unknown *	None	Minor *	Potentially Significant		
a. Will the proposed action have an effect upon or result in a need for new or altered governmental services in any of the following areas: fire or police protection, schools, parks/recreational facilities, roads or other public maintenance, water supply, sewer or septic systems, solid waste disposal, health, or other governmental services? If any, specify:		X				10a.
b. Will the proposed action have an effect upon the local or state tax base and revenues?		X				
c. Will the proposed action result in a need for new facilities or substantial alterations of any of the following utilities: electric power, natural gas, other fuel supply or distribution systems, or communications?		X				
d. Will the proposed action result in increased use of any energy source?		X				
e. Define projected revenue sources						10e.
f. Define projected maintenance costs.						10f.
g. Other:		X				

Narrative Description and Evaluation of the Cumulative and Secondary Effects on Public Services/Taxes/Utilities (attach additional pages of narrative if needed):

10a. The proposed action would not have an effect upon or result in a need for new or altered governmental services.

10e. The DNRC State Water Projects Bureau will provide funding for the project. Funding sources are identified on page 5, Section 7 (b).

10f. Upon project completion, maintenance costs will be the responsibility of the Deadman's Basin Water Users Association.

** 11. AESTHETICS/RECREATION Will the proposed action result in:	IMPACT *				Can Impact Be Mitigated *	Comment Index
	Unknown *	None	Minor *	Potentially Significant		
a. Alteration of any scenic vista or creation of an aesthetically offensive site or effect that is open to public view?			X			11a.
b. Alteration of the aesthetic character of a community or neighborhood?		X				
c. Alteration of the quality or quantity of recreational/tourism opportunities and settings?			X			11c.
d. Will any designated or proposed wild or scenic rivers, trails or wilderness areas be impacted?		X				
e. Other:		X				

Narrative Description and Evaluation of the Cumulative and Secondary Effects on Aesthetics/Recreation (attach additional pages of narrative if needed):

11 a & c. Construction will temporarily affect the aesthetics of the area in the short-term. Some campers, boaters, picnickers and anglers may be impacted. The area receives moderate to heavy angling and recreational use. The quality of the recreational opportunities and setting may be temporarily impacted. The effects will be temporary, minor, short-term, non-significant and end with the completion of the project.

12. CULTURAL/HISTORICAL RESOURCES Will the proposed action result in:	IMPACT *				Can Impact Be Mitigated *	Comment Index
	Unknown *	None	Minor *	Potentially Significant		
a. **Destruction or alteration of any site, structure or object of prehistoric historic, or paleontological importance?		X				12a.
b. Physical change that would affect unique cultural values?		X				12b
c. Effects on existing religious or sacred uses of a site or area?		X				12c.
d. Will the project affect historic or cultural resources?		X				12d.
e. Other:		X				

Narrative Description and Evaluation of the Cumulative and Secondary Effects on Cultural/Historical Resources (attach additional pages of narrative if needed):

12a-d. The proposed project will not result in the destruction, disturbance or alteration of any known site, structure, or object of prehistoric, cultural, religious, sacred, historic or paleontological importance.

SIGNIFICANCE CRITERIA

13. SUMMARY EVALUATION OF SIGNIFICANCE Will the proposed action, considered as a whole:	IMPACT *				Can Impact Be Mitigated *	Comment Index
	Unknown *	None	Minor *	Potentially Significant		
a. Have impacts that are individually limited, but cumulatively considerable? (A project or program may result in impacts on two or more separate resources that create a significant effect when considered together or in total.)		X				13a.
b. Involve potential risks or adverse effects, which are uncertain but extremely hazardous if they were to occur?		X				
c. Potentially conflict with the substantive requirements of any local, state, or federal law, regulation, standard or formal plan?		X				
d. Establish a precedent or likelihood that future actions with significant environmental impacts will be proposed?		X				
e. Generate substantial debate or controversy about the nature of the impacts that would be created?		X				
f. Is the project expected to have organized opposition or generate substantial public controversy?		X				

Narrative Description and Evaluation of the Cumulative and Secondary Effects on Significance Criteria (attach additional pages of narrative if needed):

13a. This EA found no significant impacts to the human or physical environment from the proposed action.

PART VI. NARRATIVE EVALUATION AND COMMENT

This EA did not reveal any significant negative impacts to the physical and human environment stemming from the proposed action. No threatened or endangered species would be significantly affected, and no unique or sensitive physical, cultural or historic features would be disturbed. The impacts associated with the actual construction will be short-term, temporary, minor and end with the completion of the project. Impacts associated with potential weed proliferation, wildlife stress, noise, increased construction related traffic and the quality of the recreational experience will be mitigated by reclamation, reseeding, weed control efforts, the placement of warning signs for drivers, and the implementation of all recommended best management practices. Construction related noise will end upon project completion. The proposed project will not affect public safety or the beneficial uses of reservoir water.

The no action alternative would result in the continuation of an unsafe condition on a high-hazard dam. The condition of the outlet terminal structure and dam embankment would progressively deteriorate from the uncontrolled seepage and age, resulting in potentially serious risks to public health and safety.

References:

Consultation with the U.S. Army Corps of Engineers, Helena MT. Regulatory Office, April 2009.

Consultation with the MT Department of Environmental Quality, Water Protection Bureau, Helena, MT. April, 2009.

Consultation with the MT State Historic Preservation Office, Helena, MT. April 2009.

Consultation with Ken Frazer, MT Department of Fish, Wildlife and Parks Regional Fisheries Manager, Region 5, Billings, MT. April 2009.

Species of Special Concern File Search, Montana Natural Heritage Program, Helena, MT. April 2009.

Deadman's Basin Terminal Outlet Replacement Project Design Report, WWC Engineering, Helena, MT. March 2009

Montana Water Law. MT Department of Natural Resources and Conservation, Water Resources Division, Helena MT. 2003

DNRC Historic Cultural Resources Site Forms – Deadman's Basin Irrigation Project, Trust Lands Division, Helena, MT. April 1998.

Deadman's Basin Dam Manual for Operation and Maintenance, DNRC State Water Projects Bureau, 1424 9th Avenue, P.O. Box 201601, Helena, MT 59620, Originally Published July 1993, Revised January, 2008.

A Guide to the Montana Environmental Policy Act, John Mundinger and Todd Everts, 1998. Revised by Larry Mitchell, 2004 and Todd Everts, 2006. Published by the Legislative Environmental Policy Office, Environmental Quality Council.

Climax Vegetation of Montana Based on Soils and Climate, U.S. Dept. of Agriculture, Soil Conservation Service, Bozeman, MT. September 1976

Water Resources Survey, Wheatland County, MT State Water Conservation Board, Helena, MT. 1949.

List of Prepares:

Jim Domino, DNRC – natural resources, socio-economic issues/impacts, MEPA compliance

Dolores Eustice, DNRC – editorial review, EA distribution

Rob Kingery, DNRC - budgets, project timeframe, engineering review, administrative and engineering oversight, project supervision

Randy Laskowski, DNRC – budgets, grants and funding information

Kevin Smith, DNRC - budgets, project timeframes, engineering review, administrative supervision

Sanna Yost, DNRC – Project Manager, engineering review/information, site evaluation, construction timeframes

WWC Engineering – Design Report and Design Drawings

Appendix A – Location Map and Design Plans.

Project Location

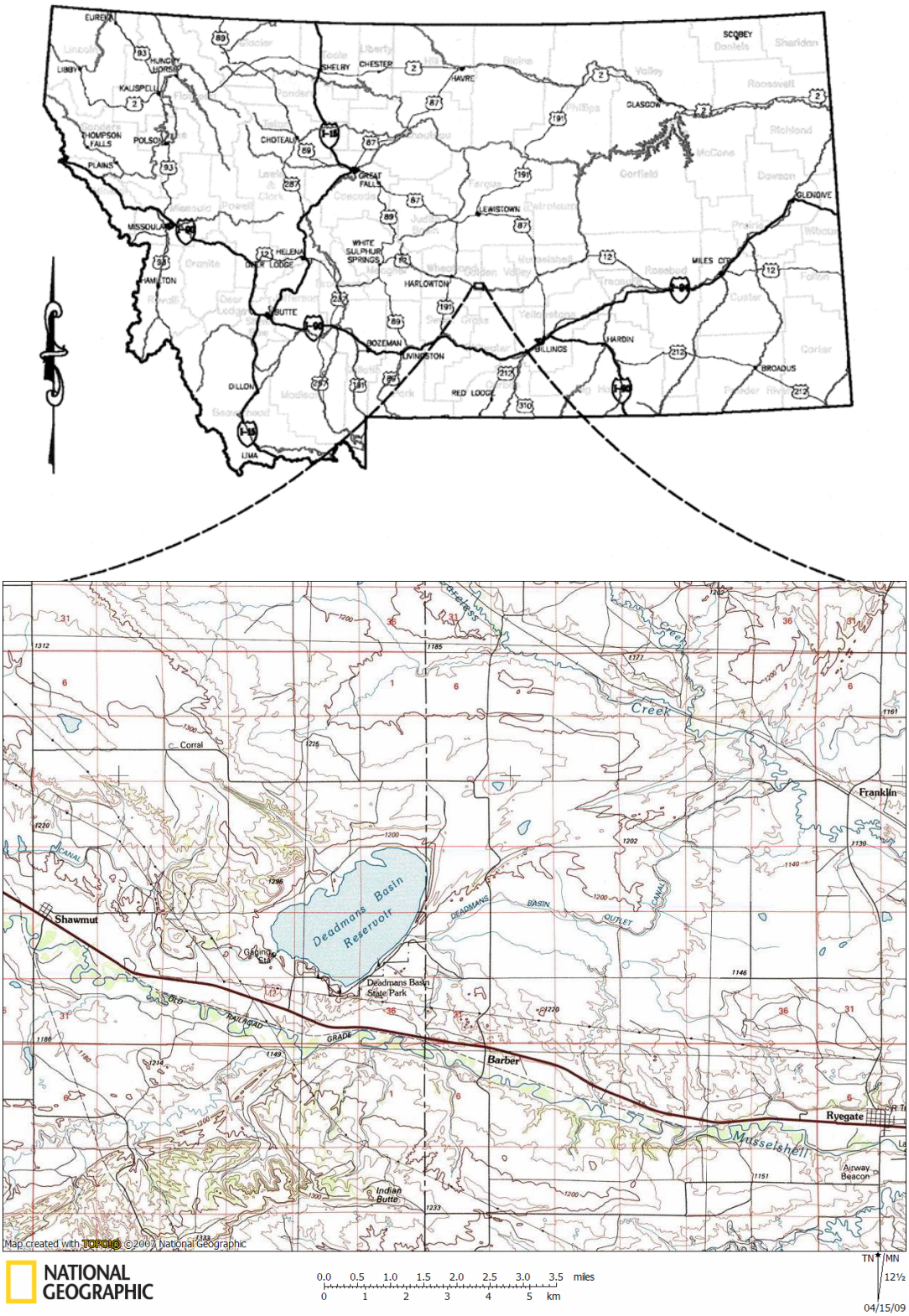

CONSTRUCTION IMPROVEMENTS FOR DEADMAN'S BASIN TERMINALOUTLET REPLACEMENT PROJECT

LOCATED IN WHEATLAND COUNTY, MONTANA

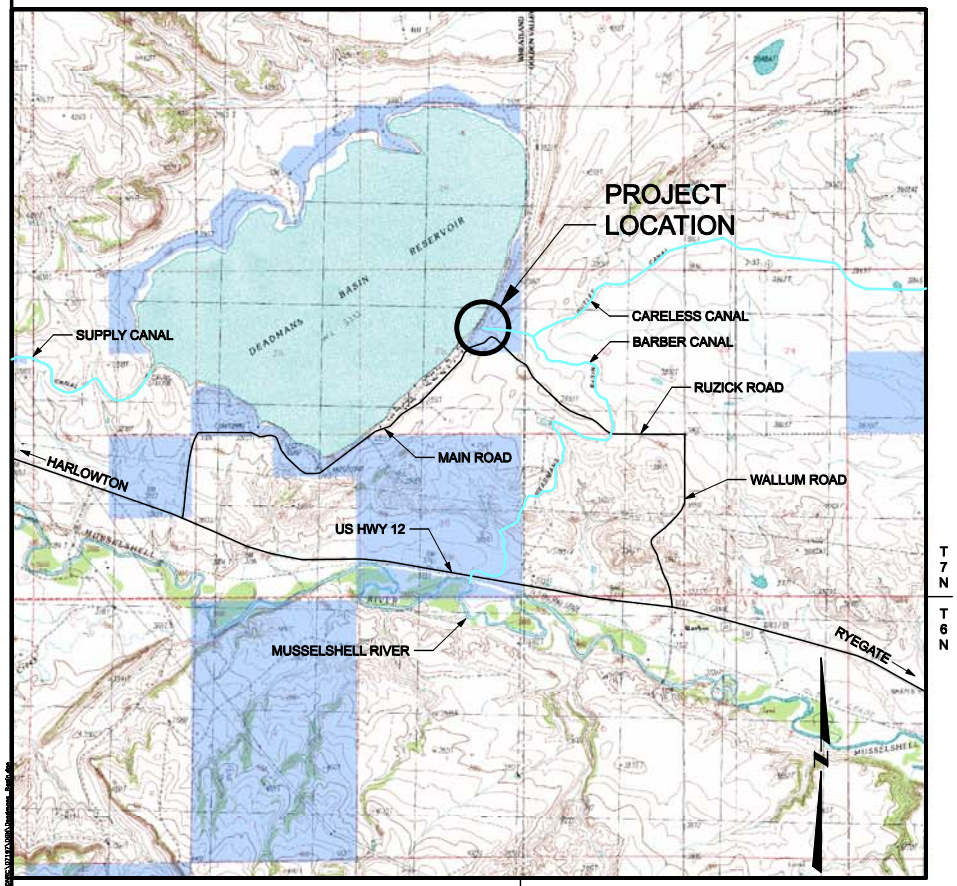

= STATE OWNED PROPERTY

VICINITY MAP

SCALE: 1" = 4000'

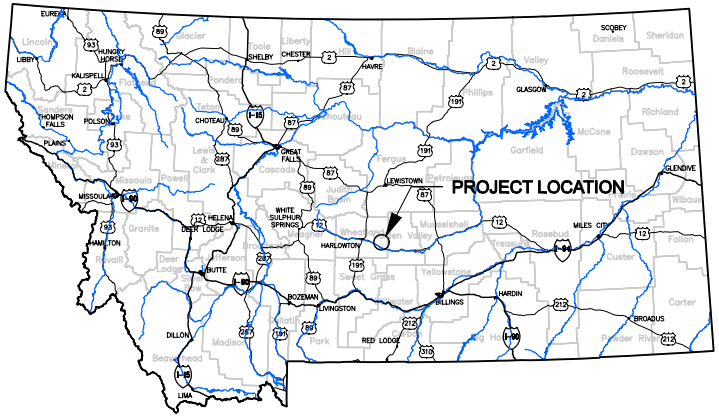

GENERAL LOCATION MAP

SCALE: 1" = 100 Miles

PREPARED FOR:

The Montana
Department of Natural Resources
and Conservation

MARCH 2009

WATER Resources Division

State Water Projects Bureau
P.O. Box 201601
Helena, MT 59620-1601
(406) 444-6646

Approved: Kevin Smith, P.E., Chief
State Water Projects Bureau, Montana DNRC

Call Before You Dig!
1-800-424-5555

PREPARED BY:

WWC ENGINEERING

MONTANA
SHAWN T. HIGLEY
No. 15101
3-26-09
LICENSED PROFESSIONAL ENGINEER

WWC ENGINEERING
1275 MAPLE STREET, SUITE F
HELENA, MT 59601
(406) 443-3962

MONTANA DEPARTMENT OF NATURAL RESOURCES & CONSERVATION
1424 9th Avenue
PO Box 201601
Helena, MT 59620-1601
(406) 444-6601

	DATE	BY
DRAWN	2/11/08	KJG
REVISED	2/2/09	BJL
	3/26/09	KJG
APPROVED	2/20/08	TEC
	2/20/08	TEC
	3/26/09	STH

DEADMAN'S BASIN TERMINAL OUTLET REPLACEMENT
Title Sheet

SHEET
T-1

DEADMAN'S BASIN
TERMINAL OUTLET REPLACEMENT PROJECT

LOCATED IN
WHEATLAND COUNTY, MONTANA

INDEX OF SHEETS

SHEET #	DESCRIPTION
T-1	TITLE SHEET
T-2	TABLE OF CONTENTS & GENERAL NOTES
P-1	AERIAL SITE PLAN & CONTROL DATUM
P-2	EXCAVATION PLAN
P-3	SEEPAGE DRAINAGE PLAN
P-4	FINAL GRADING PLAN
P-5	SITE EROSION PROTECTION & RECLAMATION PLAN
P-6	CROSS-SECTION PLAN
P-7	COORDINATE PLAN
XS-1 TO XS-2	CROSS SECTIONS
D-1 TO D-2	DETAIL SHEET - CONDUIT EXTENSION
D-3	DETAIL SHEET - FILTER DIAPHRAGM
D-4	DETAIL SHEET - TOE DRAIN
D-5	DETAIL SHEET - TERMINAL OUTLET & CHANNEL ARMORING
D-6 TO D-8	DETAIL SHEET - TERMINAL OUTLET
D-9	DETAIL SHEET - CHANNEL ARMORING
D-10	DETAIL SHEET - TOE DRAIN / ACCESS ROAD
D-11	DETAIL SHEET - CLEANOUTS / SPLASH PAD / DITCH
D-12	DETAIL SHEET - V-DITCH / TRM
S-1 TO S-2	STRUCTURAL SHEET - CONDUIT COLLAR
S-3 TO S-7	STRUCTURAL SHEET - TERMINAL OUTLET

DEADMAN'S BASIN RESERVOIR IS OWNED BY THE STATE OF MONTANA, DEPARTMENT OF NATURAL RESOURCES AND CONSERVATION (DNRC) AND IS OPERATED BY THE DEADMAN'S BASIN WATER USERS ASSOCIATION.

GENERAL NOTES

CONSTRUCTION NOTES:

1. UNLESS SPECIFICALLY SHOWN ON THE DRAWINGS, ALL WORK WILL CONFORM TO MPWSS, LATEST EDITION.
2. THE CONTRACTOR SHALL BE RESPONSIBLE FOR PERMITS REQUIRED FOR CONSTRUCTION ACTIVITIES PER PROJECT SPECIFICATIONS.
3. THE CONTRACTOR SHALL RESTORE ALL ROADWAY SURFACES TO EQUAL OR BETTER CONDITION THAN EXISTED PRIOR TO CONSTRUCTION, AS DETERMINED BY OWNER AND THE ENGINEER.
4. THE LOCATION, DEPTH AND SIZE OF EXISTING UTILITIES SHOWN ON THESE PLANS ARE APPROXIMATE. THE CONTRACTOR SHALL FIELD VERIFY THE EXISTENCE, LOCATION, DEPTH, SIZE, LINE AND GRADE OF EXISTING UTILITIES CONNECTIONS PRIOR TO CONSTRUCTION. THE CONTRACTOR SHALL BE RESPONSIBLE FOR ANY DAMAGE TO THE EXISTING FACILITIES DUE TO FAILURE TO LOCATE OR PROVIDE PROPER PROTECTION WHEN LOCATION IS KNOWN.
5. THE CONTRACTOR SHALL SUPPLY ALL NECESSARY FITTINGS, COUPLINGS, AND SPOOL PIECES FOR CONNECTING NEW UTILITIES TO EXISTING UTILITIES. THESE PLANS MAY NOT SHOW ALL REQUIRED COMPONENTS FOR MAKING THE CONNECTIONS.
6. THE CONTRACTOR IS RESPONSIBLE FOR CONTROLLING DUST AND EROSION DURING CONSTRUCTION AT HIS EXPENSE. STREETS AND/OR ROADS SHALL BE WATERED TO CONTROL DUST WHEN ORDERED BY THE ENGINEER. EROSION SHALL BE CONTROLLED IN ACCORDANCE WITH MONTANA DEPARTMENT OF ENVIRONMENTAL QUALITY REGULATIONS.
7. ALL PROFILES REPRESENT EXISTING GROUND (DASHED LINE) AND FINISHED GROUND (SOLID LINE) ALONG THE ALIGNMENTS INDICATED ON THE PLANS. ELEVATIONS ARE FINISHED GROUND ELEVATIONS.
8. ALL DISTURBED AREAS SHALL BE SEEDED BY THE CONTRACTOR IN ACCORDANCE WITH THE PROJECT SPECIFICATIONS.
9. THE CONTRACTOR SHALL NOTIFY ONE CALL @ 1-800-424-5555 FOR ONSITE UTILITY LOCATION. ALL EXISTING UTILITIES SHALL BE MARKED BEFORE DIGGING.
10. THE CONTRACTOR SHALL MAINTAIN SERVICE OF ALL EXISTING UTILITIES. IF SAID SERVICE IS DAMAGED, THE CONTRACTOR SHALL IMMEDIATELY REPAIR THE DAMAGE AT THE CONTRACTOR'S EXPENSE.
11. THE PIPE GRADES SHOWN ARE CALCULATED FROM ACTUAL DISTANCES. THE DISPLAYED PIPE LF REFLECTS THE ACTUAL PIPE LENGTH TO BE INSTALLED.
12. THE CONTRACTOR SHALL BE RESPONSIBLE FOR OBTAINING A MPDES STORMWATER CONSTRUCTION PERMIT AND COMPLYING WITH ALL TERMS OF THE PERMIT. NO SEPARATE PAYMENT WILL BE MADE FOR THIS WORK.
13. THE CONTRACTOR SHALL REFERENCE ALL SURVEY MONUMENTS, SECTION CORNERS, ¼ CORNERS AND PROPERTY CORNERS PRIOR TO BEING DISTURBED BY CONSTRUCTION. THE CONTRACTOR SHALL REPLACE ANY MONUMENTS AND CORNERS THAT ARE DISTURBED DURING CONSTRUCTION.

EXPLANATION OF SECTION CALLOUTS

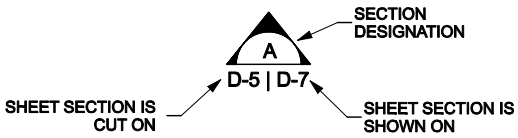

NOTE:

1. SEE "ABBREVIATIONS FOR USE ON DRAWINGS AND TEXT", PUBLISHED BY THE AMERICAN NATIONAL STANDARDS INSTITUTE INC. (ANSI) OR CONTACT THE PROJECT ENGINEER.
2. MONTANA PUBLIC WORKS STANDARD SPECIFICATIONS, FIFTH EDITION, MARCH 2003 AND THE 2006 ADDENDUM.

ALL CONSTRUCTION SHALL BE PERFORMED IN ACCORDANCE WITH THE CURRENT VERSION OF THE MONTANA PUBLIC WORKS STANDARD SPECIFICATIONS, PROJECT SPECIFIC SPECIFICATIONS, AND THESE PLANS.

WWC ENGINEERING
1275 MAPLE STREET, SUITE F
HELENA, MT 59601
(406) 443-3962

MONTANA DEPARTMENT OF NATURAL RESOURCES & CONSERVATION
1424 9th Avenue
PO Box 201601
Helena, MT 59620-1601
(406) 444-6601

DRAWN	DATE	BY
	2/08	KJG
REVISED		
	2/09	BIL
	3/09	KJG
APPROVED		
	2/08	SRH
	2/09	BIL
	3/09	SRH

DEADMAN'S BASIN TERMINAL OUTLET REPLACEMENT
Table of Contents & General Notes Sheet

SHEET
T-2

MONTANA SHAWN T. HIGLEY No. 15101 LICENSED PROFESSIONAL ENGINEER

WWC ENGINEERING
1275 MAPLE STREET, SUITE F
HELENA, MT 59601
(406) 443-3962

MONTANA DEPARTMENT OF NATURAL RESOURCES & CONSERVATION
1424 9th Avenue
PO Box 201601
Helena, MT 59620-1601
(406) 444-6601

DRAWN	
DATE	BY
2/11/08	KJG
REVISED	
4/30/08	KJG
2/2/09	BLL
APPROVED	
2/17/08	STH
4/30/08	TEC
3/9/09	STH

DEADMAN'S BASIN TERMINAL OUTLET REPLACEMENT
Aerial Site Plan & Control Datum

SHEET
P-1

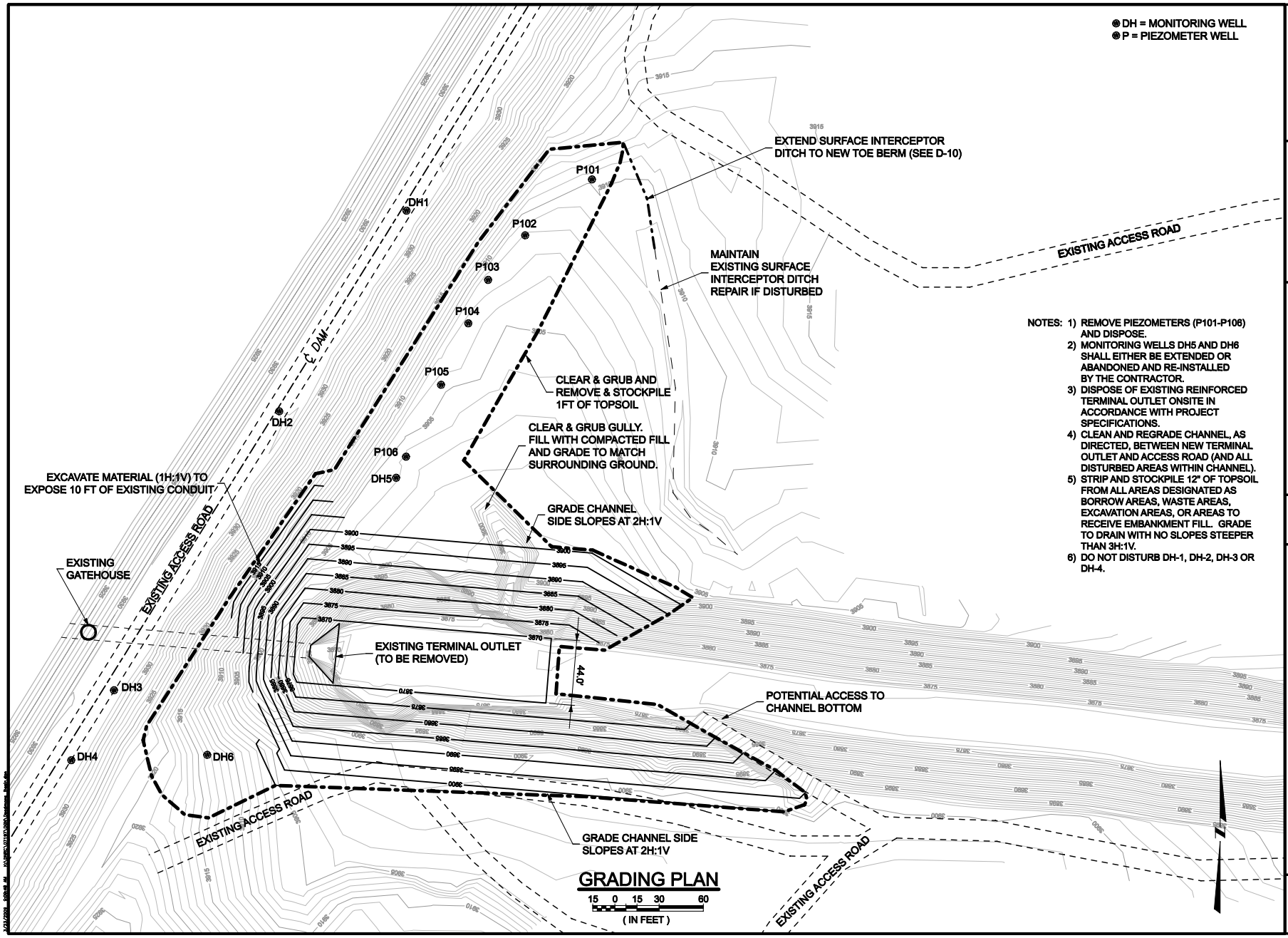

GRADING PLAN

NOTES:
1) REMOVE PIEZOMETERS (P101-P106) AND DISPOSE.
2) MONITORING WELLS DH5 AND DH6 SHALL EITHER BE EXTENDED OR ABANDONED AND RE-INSTALLED BY THE CONTRACTOR.
3) DISPOSE OF EXISTING REINFORCED TERMINAL OUTLET ONSITE IN ACCORDANCE WITH PROJECT SPECIFICATIONS.
4) CLEAN AND REGRADE CHANNEL, AS DIRECTED, BETWEEN NEW TERMINAL OUTLET AND ACCESS ROAD (AND ALL DISTURBED AREAS WITHIN CHANNEL).
5) STRIP AND STOCKPILE 12" OF TOPSOIL FROM ALL AREAS DESIGNATED AS BORROW AREAS, WASTE AREAS, EXCAVATION AREAS, OR AREAS TO RECEIVE EMBANKMENT FILL. GRADE TO DRAIN WITH NO SLOPES STEEPER THAN 3H:1V.
6) DO NOT DISTURB DH-1, DH-2, DH-3 OR DH-4.

MONTANA SHAWN M. HUNT 15101 PROFESSIONAL ENGINEER

WWC ENGINEERING
1275 MAPLE STREET, SUITE F
HELENA, MT 59601
(406) 443-3962

MONTANA DEPARTMENT OF NATURAL RESOURCES & CONSERVATION
1424 9th Avenue
PO Box 201601
Helena, MT 59620-1601
(406) 444-6601

DRAWN		
DATE	BY	
2/11/08	KJG	
REVISED		
2/2/09	BJL	
3/9/09	KJG	
APPROVED		
2/11/08	TEC	
3/9/09	TEC	
3/9/09	SHH	

DEADMAN'S BASIN TERMINAL OUTLET REPLACEMENT

Excavation Plan

SHEET
P-2

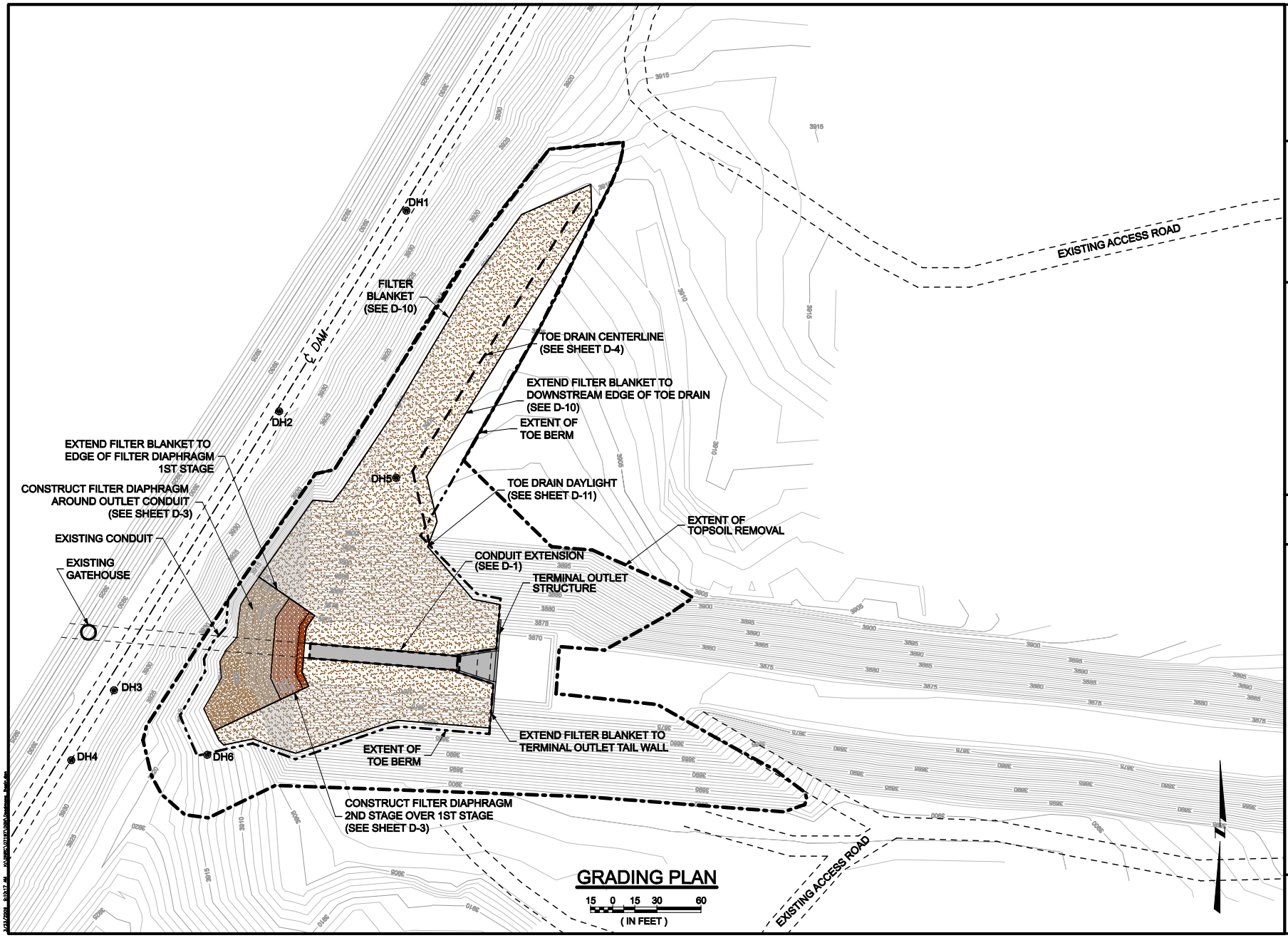

GRADING PLAN

15 0 15 30 60

(IN FEET)

MONTANA SHAWN T. HIGLEY No. 15101 LICENSED PROFESSIONAL ENGINEER

WWC ENGINEERING
1275 MAPLE STREET, SUITE F
HELENA, MT 59601
(406) 443-3962

MONTANA DEPARTMENT OF NATURAL RESOURCES & CONSERVATION
1424 9th Avenue
PO Box 201601
Helena, MT 59620-1601
(406) 444-6601

DRAWN		
DATE	BY	
2/11/08	KJG	
REVISED		
2/2/09	BLL	
3/9/09	KJG	
APPROVED		
2/11/08	STH	
4/30/08	TEC	
3/9/09	STH	

DEADMAN'S BASIN TERMINAL OUTLET REPLACEMENT

Seepage & Drainage Plan Overview

SHEET

P-3

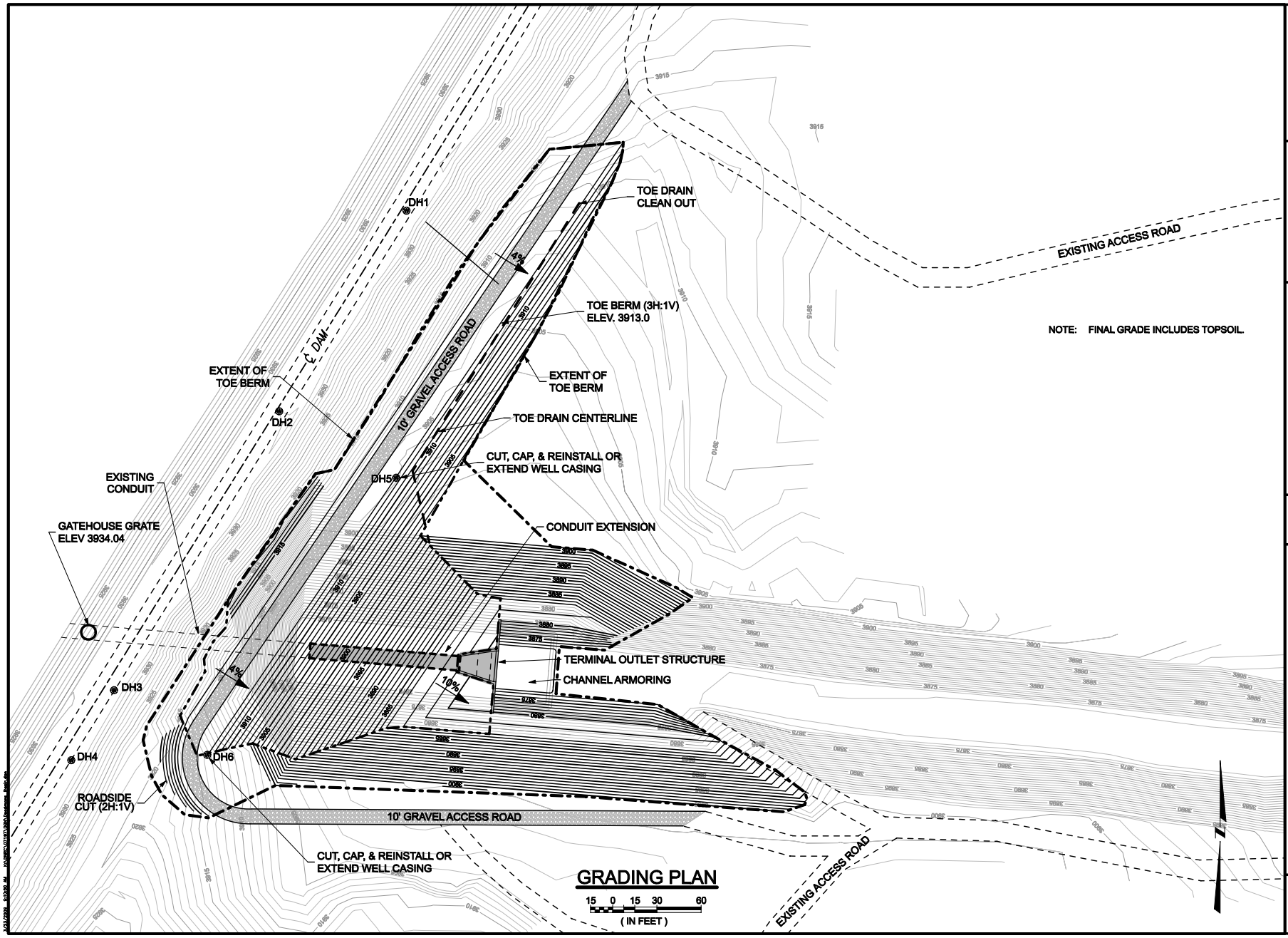

GRADING PLAN

MONTANA SHAWN T. HIGLEY No. 15101 LICENSED PROFESSIONAL ENGINEER

WWC ENGINEERING
1275 MAPLE STREET, SUITE F
HELENA, MT 59601
(406) 443-3962

MONTANA DEPARTMENT OF NATURAL RESOURCES & CONSERVATION
1424 9th Avenue
PO Box 201601
Helena, MT 59620-1601
(406) 444-6601

DRAWN		
DATE	BY	
2/11/08	KJG	
REVISED		
2/2/09	BLL	
3/9/09	KJG	
APPROVED		
2/11/08	STH	
4/30/08	TEC	
3/9/09	STH	

DEADMAN'S BASIN TERMINAL OUTLET REPLACEMENT

Final Grading Plan

SHEET
P-4

NOTES:

1. MAINTAIN EXISTING SURFACE WATER INTERCEPTOR DITCH. REPAIR IF DISTURBED
2. SEEDING OF DISTURBED AREAS SHALL BE PERFORMED IN ACCORDANCE WITH THE PROJECT SPECIFICATIONS.
3. EROSON CONTROL MAT SHALL BE NORTH AMERICAN GREEN C-350 OR APPROVED EQUAL.

LEGEND

DIRECTION OF SURFACE WATER RUNOFF

BEST MANAGMENT PRACTICES (SILT FENCE)

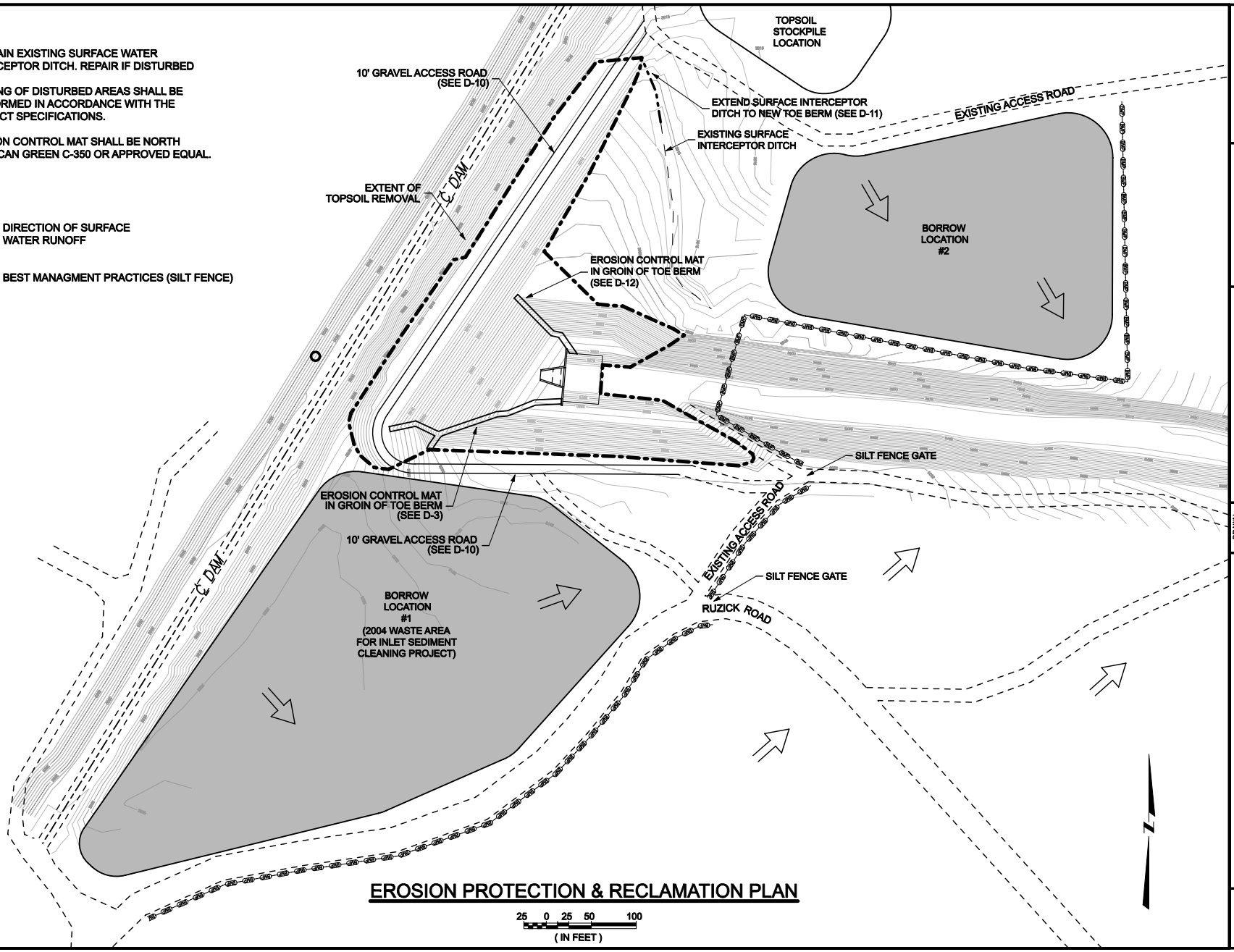

EROSION PROTECTION & RECLAMATION PLAN

25 0 25 50 100
(IN FEET)

MONTANA SHAWN T. HIGLEY No. 15101 LICENSED PROFESSIONAL ENGINEER

WWC ENGINEERING
1275 MAPLE STREET, SUITE F
HELENA, MT 59601
(406) 443-3962

MONTANA DEPARTMENT OF NATURAL RESOURCES & CONSERVATION
1424 9th Avenue
PO Box 201601
Helena, MT 59620-1601
(406) 444-6601

DRAWN		
DATE	BY	
4/30/08	KJG	
REVISED		
2/2/09	BLL	
3/9/09	KJG	
APPROVED		
4/30/08	STH	
3/9/09	STH	

DEADMAN'S BASIN TERMINAL OUTLET REPLACEMENT
Site Erosion Protection and Reclamation Plan

SHEET
P-5

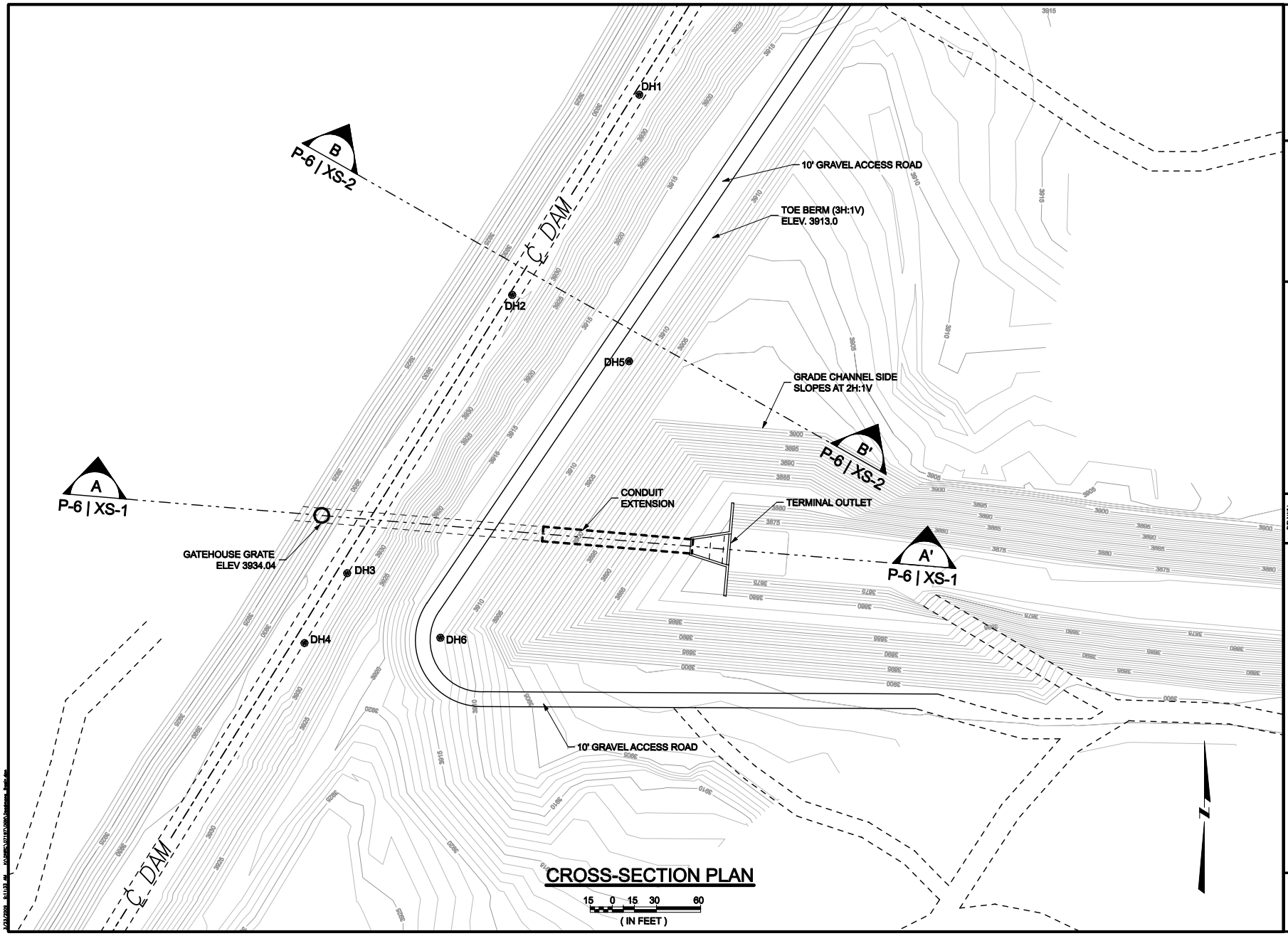

CROSS-SECTION PLAN

MONTANA
SHAWN T. HIGLEY
No. 15101
LICENSED
PROFESSIONAL ENGINEER

WWC ENGINEERING
1275 MAPLE STREET, SUITE F
HELENA, MT 59601
(406) 443-3962

MONTANA DEPARTMENT OF NATURAL RESOURCES & CONSERVATION
1424 9th Avenue
PO Box 201601
Helena, MT 59620-1601
(406) 444-6601

DRAWN		
DATE	BY	
2/11/08	KJG	
REVISED		
4/30/08	KJG	
2/2/09	BLL	
APPROVED		
2/11/08	STH	
4/30/08	TEC	
3/9/09	STH	

DEADMAN'S BASIN TERMINAL OUTLET REPLACEMENT
Cross-Section Plan

SHEET
P-6

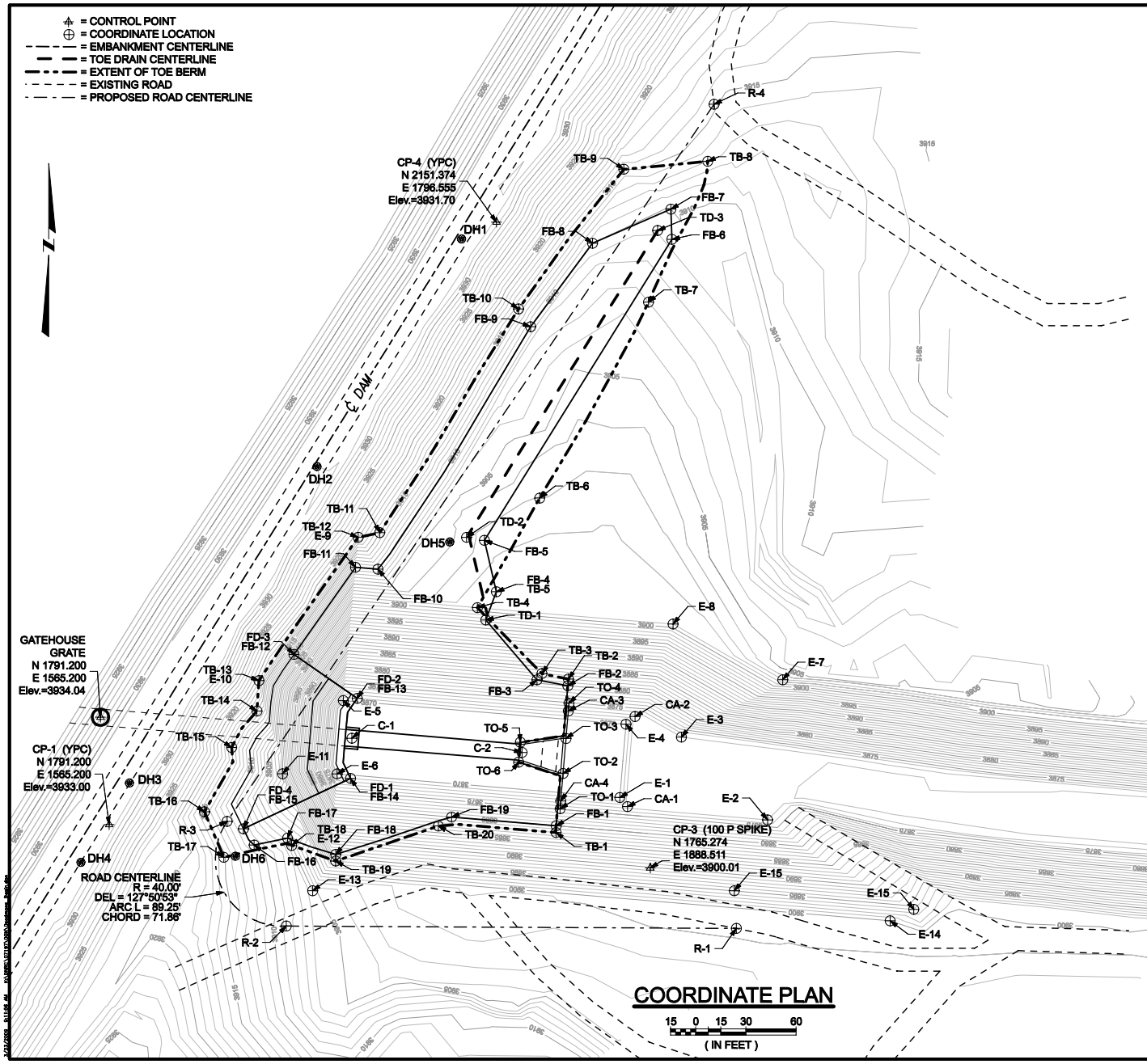

COORDINATE PLAN

TABLE OF COORDINATES

POINT #	DESCRIPTION	EASTING	NORTHING	ELEVATION
C-1	CONDUIT EXTENSION	1710.212	1842.901	3672.0
C-2	CONDUIT EXTENSION	1811.857	1834.396	3672.0
CA-1	CHANNEL ARMORING	1674.871	1802.044	3678.0
CA-2	CHANNEL ARMORING	1679.364	1855.857	3678.0
CA-3	CHANNEL ARMORING	1639.524	1859.198	3678.0
CA-4	CHANNEL ARMORING	1635.011	1805.386	3678.0
E-1	EXCAVATION	1670.324	1807.442	3670.0
E-2	EXCAVATION	1958.565	1794.046	3673.0
E-3	EXCAVATION	1907.092	1843.565	3673.0
E-4	EXCAVATION	1873.973	1851.291	3670.0
E-5	EXCAVATION	1705.094	1865.406	3670.0
E-6	EXCAVATION	1701.433	1821.558	3670.0
E-7	EXCAVATION	1967.641	1877.827	3903.0
E-8	EXCAVATION	1902.082	1911.158	3901.0
E-9	EXCAVATION	1713.985	1983.004	3919.0
E-10	EXCAVATION	1654.693	1877.319	3919.0
E-11	EXCAVATION	1668.783	1821.609	3900.0
E-12	EXCAVATION	1674.209	1778.760	3905.0
E-13	EXCAVATION	1686.738	1751.692	3905.0
E-14	EXCAVATION	2031.796	1733.738	3900.0
E-15	EXCAVATION	2045.936	1740.584	3899.0
FB-1	FILTER BLANKET	1632.265	1790.554	3660.0
FB-2	FILTER BLANKET	1639.244	1874.263	3660.0
FB-3	FILTER BLANKET	1620.843	1877.802	3661.0
FB-4	FILTER BLANKET	1798.524	1930.458	3901.5
FB-5	FILTER BLANKET	1789.383	1961.208	3904.8
FB-6	FILTER BLANKET	1901.373	2141.142	3909.3
FB-7	FILTER BLANKET	1900.610	2159.161	3910.0
FB-8	FILTER BLANKET	1853.986	2138.788	3910.0
FB-9	FILTER BLANKET	1817.013	2088.888	3910.0
FB-10	FILTER BLANKET	1725.757	1943.957	3910.0
FB-11	FILTER BLANKET	1712.344	1945.078	3910.0
FB-12	FILTER BLANKET	1675.593	1892.987	3910.0
FB-13	FILTER BLANKET	1713.403	1866.718	3872.8
FB-14	FILTER BLANKET	1709.405	1818.885	3872.8
FB-15	FILTER BLANKET	1645.415	1788.743	3910.0
FB-16	FILTER BLANKET	1651.606	1779.025	3910.0
FB-17	FILTER BLANKET	1671.763	1783.143	3905.6
FB-18	FILTER BLANKET	1700.554	1773.464	3894.0
FB-19	FILTER BLANKET	1769.805	1795.774	3860.0
FD-1	FILTER DIAPHRAGM	1709.405	1818.885	3869.0
FD-2	FILTER DIAPHRAGM	1713.403	1866.718	3869.0
FD-3	FILTER DIAPHRAGM	1675.593	1892.987	3910.0
FD-4	FILTER DIAPHRAGM	1645.415	1788.743	3910.0
R-1	ROAD CENTERLINE	1939.945	1729.226	3900.7
R-2	ROAD CENTERLINE	1671.024	1730.635	3908.7
R-3	ROAD CENTERLINE	1635.658	1793.186	3913.5
R-4	ROAD CENTERLINE	1926.614	2221.872	3915.2
TB-1	TOE BERM	1632.182	1786.541	3662.0
TB-2	TOE BERM	1639.565	1878.250	3663.0
TB-3	TOE BERM	1623.760	1881.578	3664.0
TB-4	TOE BERM	1785.203	1920.926	3901.0
TB-5	TOE BERM	1798.524	1930.458	3902.5
TB-6	TOE BERM	1822.423	1966.449	3903.0
TB-7	TOE BERM	1867.417	2103.577	3907.0
TB-8	TOE BERM	1922.620	2187.791	3913.0
TB-9	TOE BERM	1872.679	2183.055	3915.0
TB-10	TOE BERM	1809.817	2089.523	3915.0
TB-11	TOE BERM	1726.846	1965.520	3915.0
TB-12	TOE BERM	1713.985	1983.004	3919.0
TB-13	TOE BERM	1654.693	1877.319	3919.0
TB-14	TOE BERM	1653.512	1859.117	3915.0
TB-15	TOE BERM	1638.371	1837.353	3915.0
TB-16	TOE BERM	1622.139	1798.910	3915.0
TB-17	TOE BERM	1633.665	1771.695	3913.4
TB-18	TOE BERM	1674.209	1778.760	3905.0
TB-19	TOE BERM	1700.524	1769.453	3898.0
TB-20	TOE BERM	1761.586	1790.415	3663.0
TD-1	TOE DRAIN	1790.177	1913.585	3897.4
TD-2	TOE DRAIN	1778.706	1962.978	3898.4
TD-3	TOE DRAIN	1892.883	2146.426	3904.4
TO-1	TERMINAL OUTLET	1834.618	1800.698	3660.0
TO-2	TERMINAL OUTLET	1836.390	1821.826	3672.0
TO-3	TERMINAL OUTLET	1838.142	1842.719	3672.0
TO-4	TERMINAL OUTLET	1839.915	1863.865	3660.0
TO-5	TERMINAL OUTLET	1810.660	1840.482	3662.0
TO-6	TERMINAL OUTLET	1809.864	1828.564	3662.0

MONTANA SHAWN T. HIGLEY No. 15104 PROFESSIONAL ENGINEER

WWC ENGINEERING
1275 MAPLE STREET, SUITE F
HELENA, MT 59601
(406) 443-3962

MONTANA DEPARTMENT OF NATURAL RESOURCES & CONSERVATION
1424 9th Avenue
PO Box 201601
Helena, MT 59620-1601
(406) 444-6601

	DATE	BY
DRAWN	2/09/09	KJG
REVISED	3/09/09	KJG
APPROVED	3/09/09	STH

DEADMAN'S BASIN TERMINAL OUTLET REPLACEMENT

Coordinate Plan

SHEET

P-7

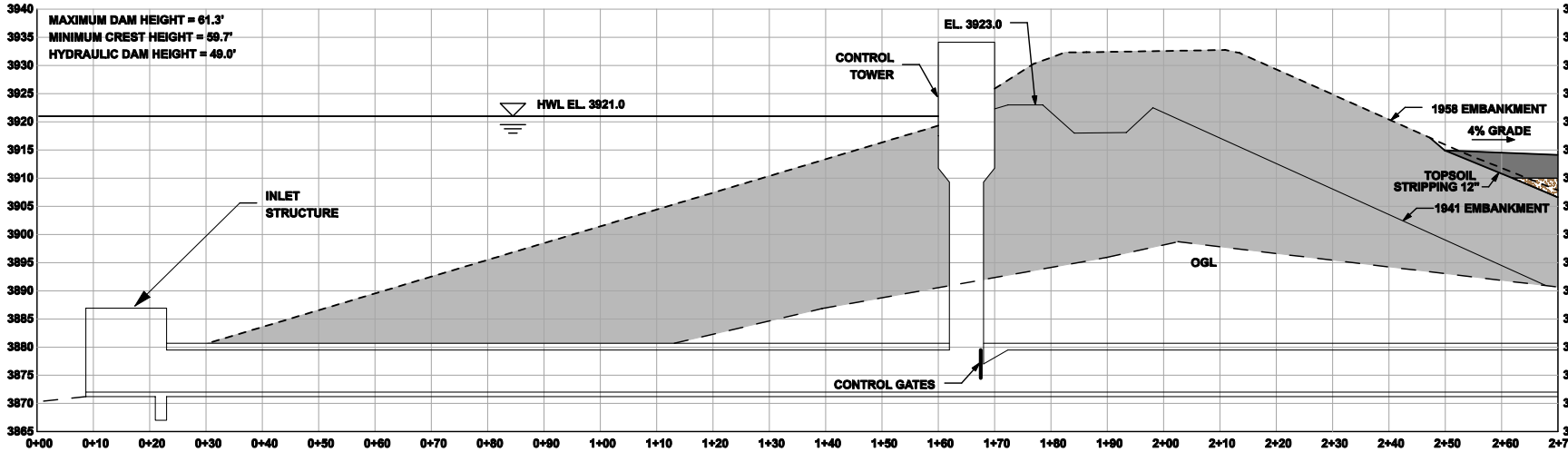

A-A'
P-6 | XS-1
CROSS SECTION
5 0 5 10 20
(IN FEET)

EGL = EXISTING GROUND LINE
OGL = ORIGINAL GROUND LINE

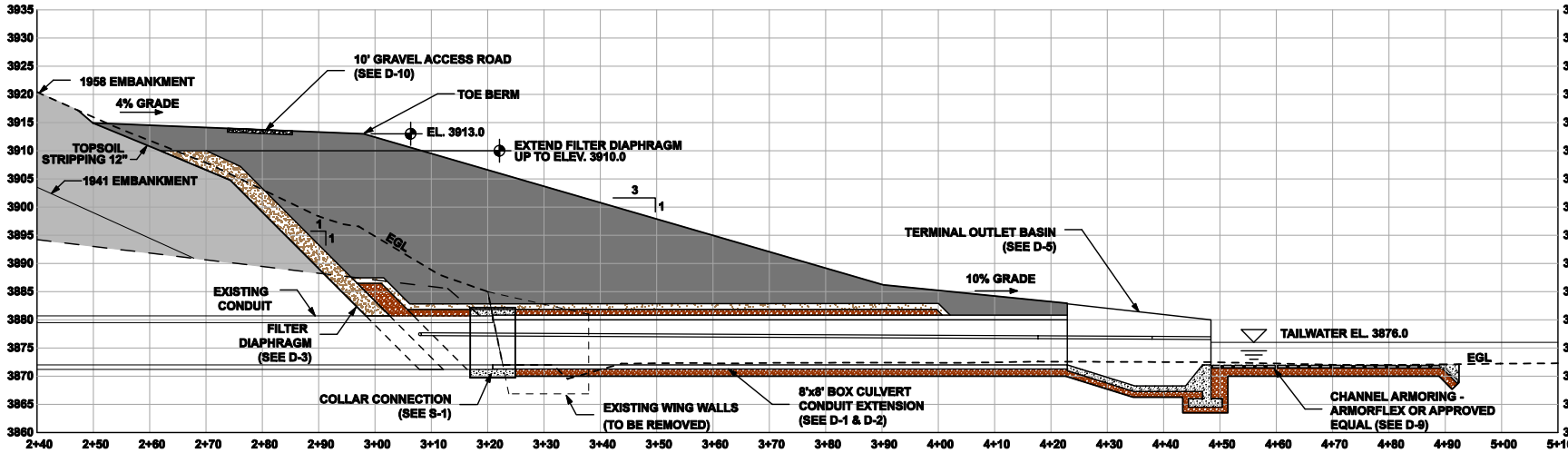

A-A'
P-6 | XS-1
CROSS SECTION
5 0 5 10 20
(IN FEET)

MONTANA
JOHN M. HOLT
No. 15101
REGISTERED PROFESSIONAL ENGINEER
MESSINGER
2/25/09

WWC ENGINEERING
1275 MAPLE STREET, SUITE F
HELENA, MT 59601
(406) 443-3962

MONTANA DEPARTMENT OF NATURAL RESOURCES & CONSERVATION
1424 9th Avenue
PO Box 201601
Helena, MT 59620-1601
(406) 444-6601

DRAWN		
DATE	BY	
2/11/08	KJG	
REVISED		
2/2/09	BJL	
2/26/09	BJL	
APPROVED		
2/26/09	TEC	
2/26/09	TEC	
3/5/09	STH	

DEADMAN'S BASIN TERMINAL OUTLET REPLACEMENT
Cross Sections A-A'

SHEET
XS-1

2/23/2009 9:05:02 AM K:\DWG\2010\DEB\Sections_Rev0.dwg

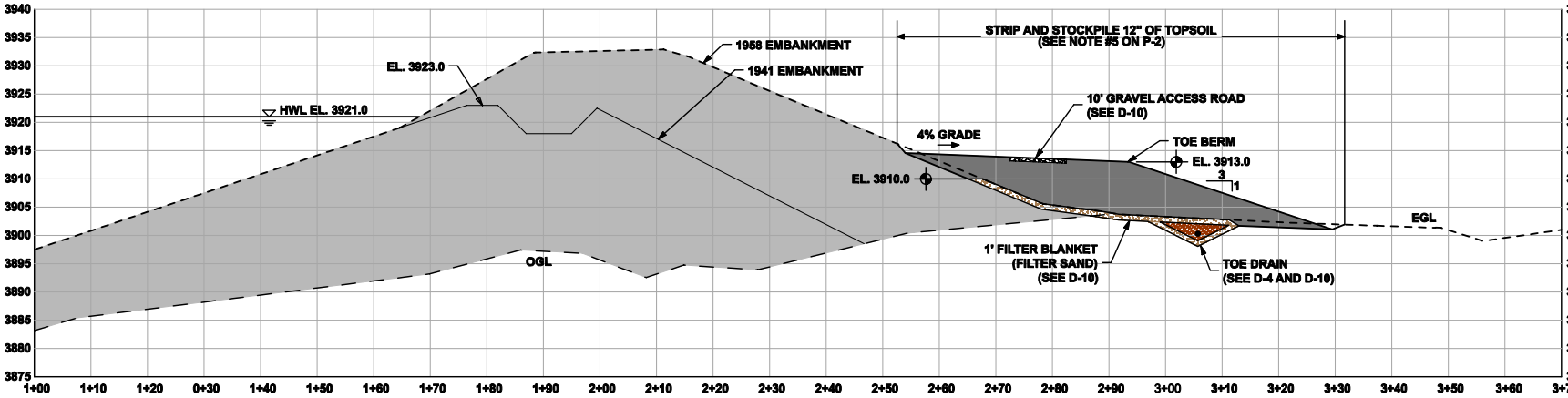

B-B'
P-6 | XS-2

CROSS SECTION

5 0 5 10 20
(IN FEET)

MONTANA
SHAWN T. HIGLEY
No. 15101
LICENSED
PROFESSIONAL ENGINEER

WWC ENGINEERING
1275 MAPLE STREET, SUITE F
HELENA, MT 59601
(406) 443-3962

MONTANA DEPARTMENT OF NATURAL RESOURCES & CONSERVATION
1424 9th Avenue
PO Box 201601
Helena, MT 59620-1601
(406) 444-6601

DRAWN	
DATE	BY
2/11/08	KJG
REVISED	
2/2/09	BLL
3/9/09	KJG
APPROVED	
2/11/08	STH
4/30/08	TEC
3/9/09	STH

DEADMAN'S BASIN TERMINAL OUTLET REPLACEMENT

Cross Section B-B'

SHEET
XS-2

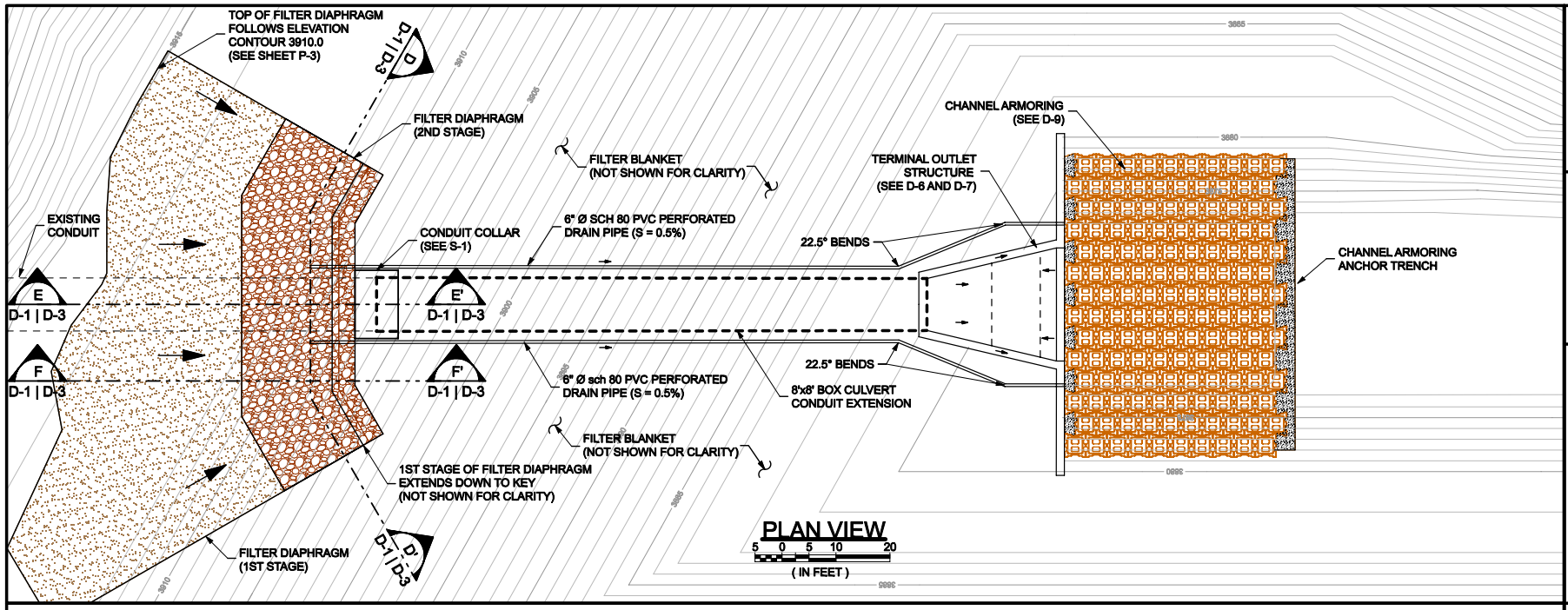

PLAN VIEW

5 0 5 10 20
(IN FEET)

I.E. = INVERT ELEVATION
EGL = EXISTING GROUND LINE
OGL = ORIGINAL GROUND LINE

NOTE: 6" Ø SCH 80 PVC PERFORATED DRAIN PIPE NOT SHOWN THIS VIEW FOR CLARITY

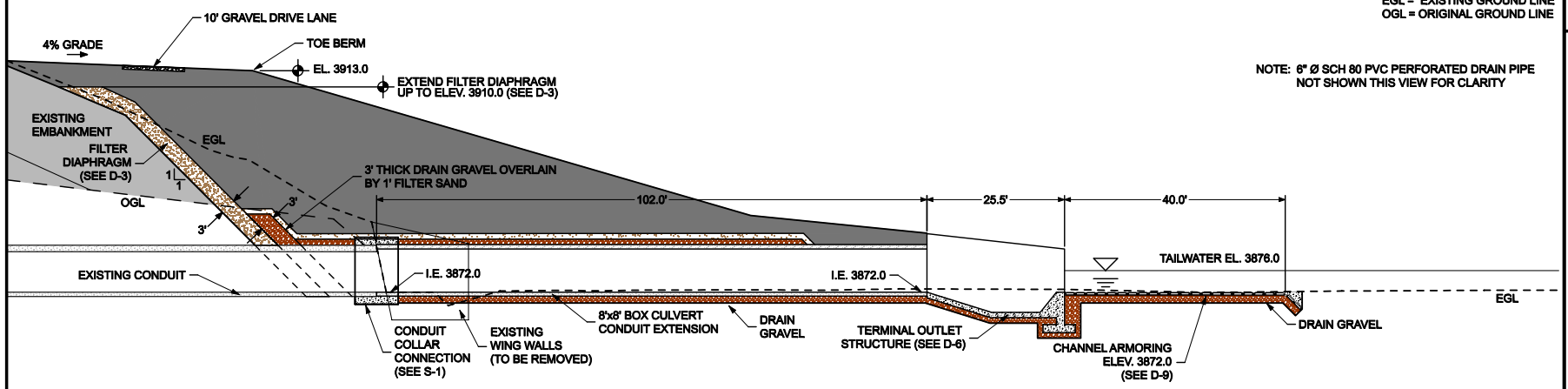

PROFILE VIEW

5 0 5 10 20
(IN FEET)

MONTANA SHAWN T. HIGLEY No. 15101 LICENSED PROFESSIONAL ENGINEER

WWC ENGINEERING
1275 MAPLE STREET, SUITE F
HELENA, MT 59601
(406) 443-3962

MONTANA DEPARTMENT OF NATURAL RESOURCES & CONSERVATION
1424 9th Avenue
PO Box 201601
Helena, MT 59620-1601
(406) 444-6601

DRAWN	
DATE	BY
2/08	RDN
REVISED	
4/30/08	KJG
3/9/09	BLL
APPROVED	
2/08	STH
4/30/08	TEC
3/9/09	STH

DEADMAN'S BASIN TERMINAL OUTLET REPLACEMENT
Detail Sheet - Conduit Extension

SHEET
D-1

EGL = EXISTING GROUND LINE

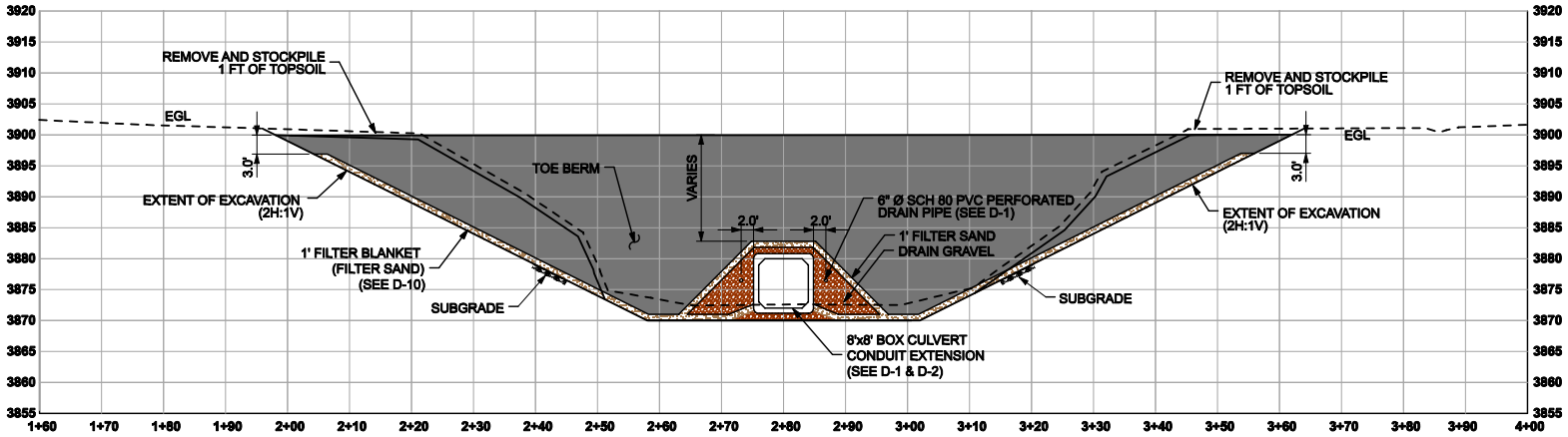

CONDUIT EXTENSION TYPICAL SECTION

5 0 5 10 20

(IN FEET)

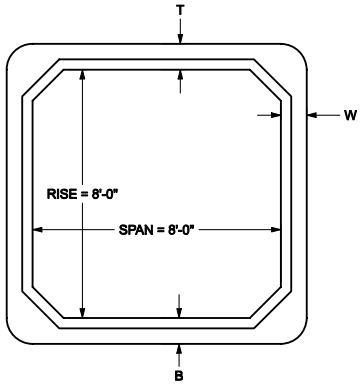

END VIEW

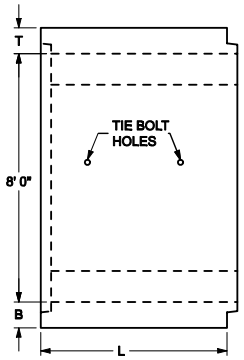

LONGITUDINAL SECTION

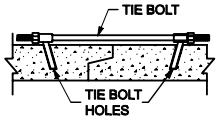

ADJUSTABLE TIE BOLT

BOX CULVERT TYPICAL SECTION

NTS

NOTES:

1) TO BE PROVIDED BY CONDUIT MANUFACTURER: BOX CULVERT CONDUIT EXTENSION TO BE DESIGNED AND STAMPED BY A PROFESSIONAL ENGINEER REGISTERED IN THE STATE OF MONTANA.

2) MANUFACTURER TO DESIGN BOX CULVERT CONDUIT EXTENSION FOR 2 TO 40 FEET OF FILL ABOVE THE CULVERT WITH AN ADDITIONAL HS-20 TRAFFIC LOADING.

3) DESIGN SHALL BE IN ACCORDANCE WITH THE LATEST MONTANA PUBLIC WORKS STANDARD SPECIFICATIONS.

4) BOX CULVERTS SHALL BE CAST WITH ADEQUATE LIFTING PINS FOR INSTALLATION AND WITH TIE BOLT HOLES FOR CONNECTING SECTIONS TOGETHER.

5) BOX CULVERTS TO BE INSTALLED IN ACCORDANCE WITH MANUFACTURER'S INSTRUCTIONS.

6) PLACE JOINT SEALANT BETWEEN ALL BOX CULVERT SECTIONS.

7) ALL BOX CULVERT JOINTS SHALL BE GROUTED PER THE MANUFACTURER'S INSTRUCTIONS. GROUT JOINTS INSIDE CONDUIT (LOWER HALF, BELOW FLOWLINE) TO MAKE JOINTS "SOIL TIGHT".

8) TIE BOLTS SHOULD NOT BE USED TO PULL THE JOINT TOGETHER.

WWC ENGINEERING
1275 MAPLE STREET, SUITE F
HELENA, MT 59601
(406) 443-3962

MONTANA DEPARTMENT OF NATURAL RESOURCES & CONSERVATION
1424 9th Avenue
PO Box 201601
Helena, MT 59620-1601
(406) 444-6601

DRAWN		
DATE	BY	
2/11/08	KJG	
REVISED		
2/2/09	BJL	
3/26/09	KJG	
APPROVED		
2/10/08	TEC	
3/26/09	STH	

DEADMAN'S BASIN TERMINAL OUTLET REPLACEMENT

Detail Sheet - Conduit Extension

SHEET

D-2

2/13/2009 9:28:26 AM K:\DWG\12110\DTA\Deadmans_Basin.dwg

EGL = EXISTING GROUND LINE
OGL = ORIGINAL GROUND LINE

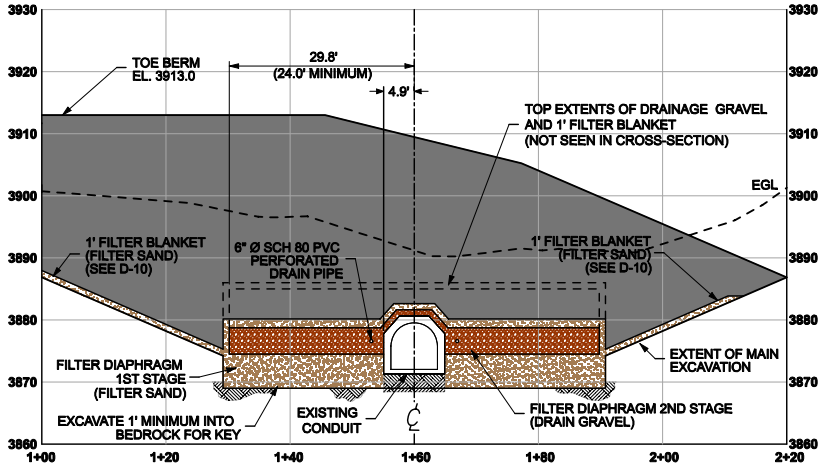

D-D'
D-1 | D-3
CROSS SECTION
5 0 5 10 20
(IN FEET)

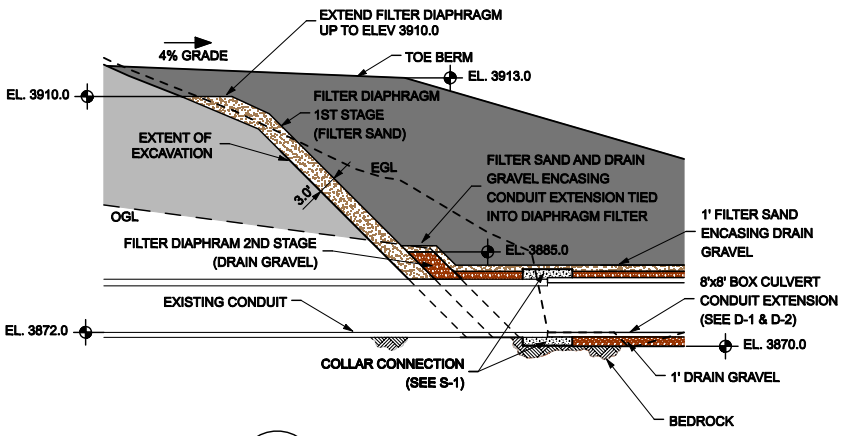

E-E'
D-1 | D-3
CROSS SECTION
5 0 5 10 20
(IN FEET)

NOTE: SECTION D-D' CUT AT THE TRANSITION FROM THE FILTER DIAPHRAGM TO THE CONDUIT EXTENSION.

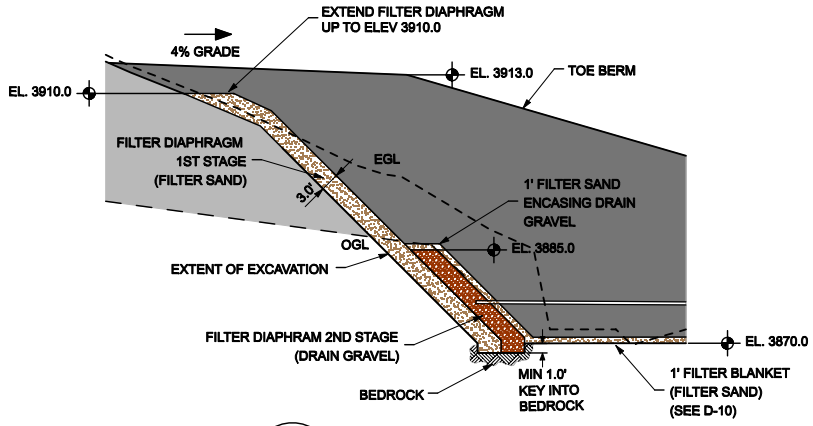

F-F'
D-1 | D-3
CROSS SECTION
5 0 5 10 20
(IN FEET)

MONTANA
SHAWN T. HIGLEY
No. 15101
LICENSED
PROFESSIONAL ENGINEER

WWC ENGINEERING
1275 MAPLE STREET, SUITE F
HELENA, MT 59601
(406) 443-3962

MONTANA DEPARTMENT OF NATURAL RESOURCES & CONSERVATION
1424 9th Avenue
PO Box 201601
Helena, MT 59620-1601
(406) 444-6601

DRAWN		
DATE	BY	
2/11/08	KJG	
REVISED		
2/2/09	BLL	
3/9/09	KJG	
APPROVED		
2/11/08	STH	
4/30/09	TEC	
3/9/09	STH	

DEADMAN'S BASIN TERMINAL OUTLET REPLACEMENT
Detail Sheet - Filter Diaphragm

SHEET
D-3

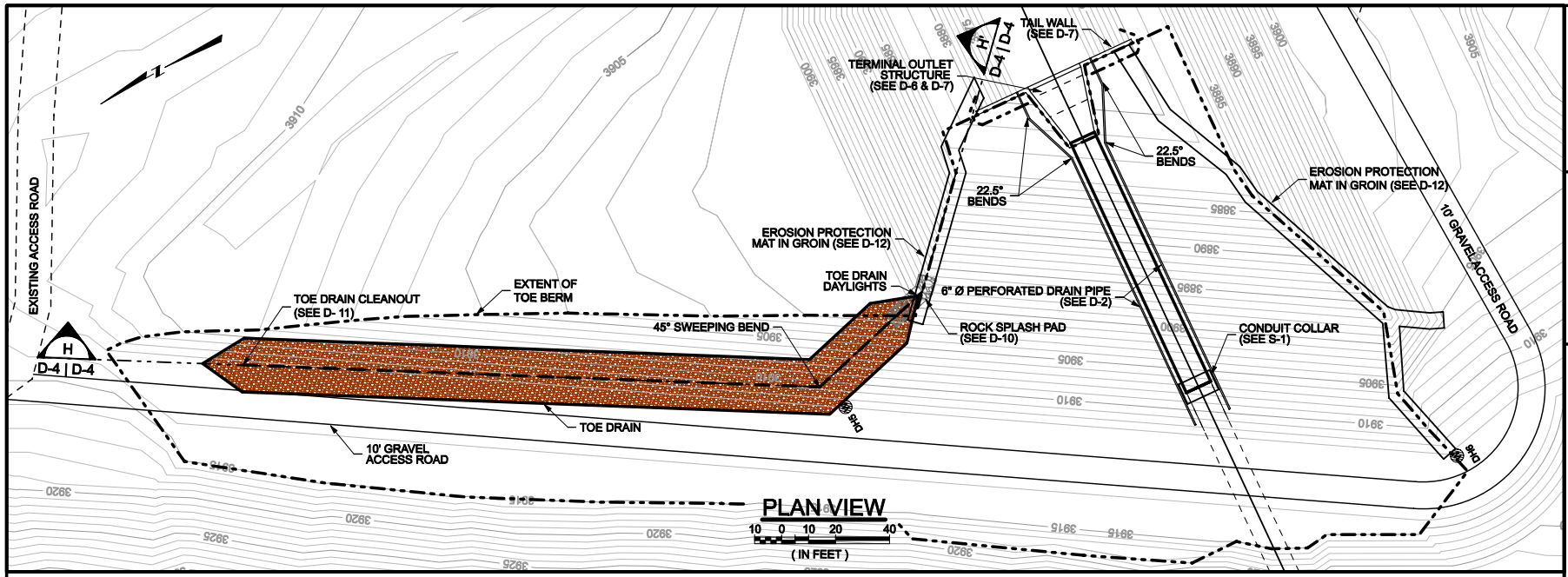

EGL = EXISTING GROUND LINE

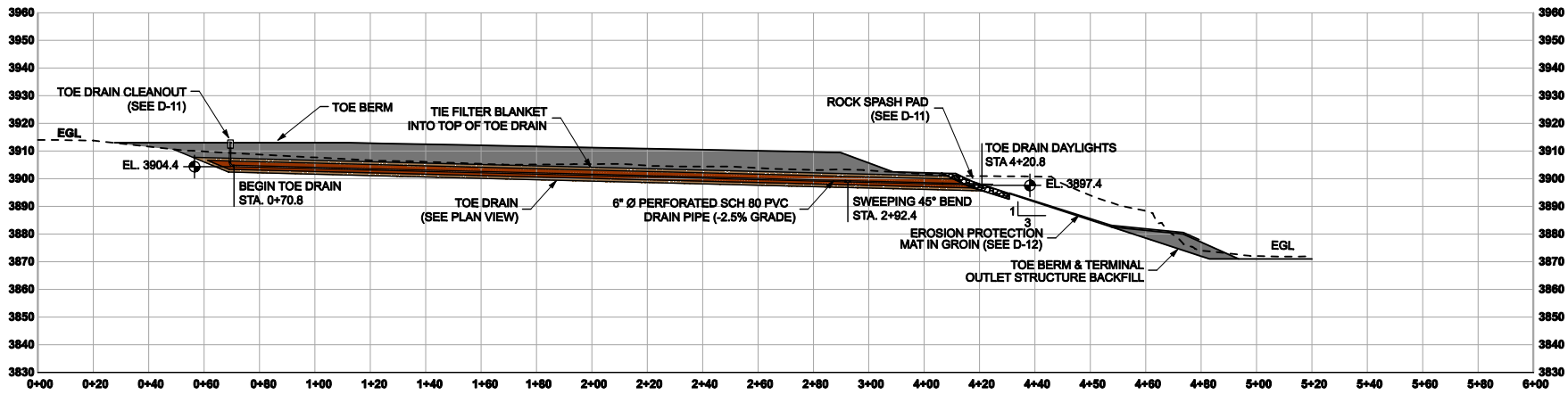

H-H'
D-4 | D-4

CROSS SECTION

10 0 10 20 40
(IN FEET)

MONTANA
PHAYN F. WEST
No. 16101
PROFESSIONAL ENGINEER
MONTANA

WWC ENGINEERING
1275 MAPLE STREET, SUITE F
HELENA, MT 59601
(406) 443-3962

MONTANA DEPARTMENT OF NATURAL
RESOURCES & CONSERVATION
1424 9th Avenue
PO Box 201601
Helena, MT 59620-1601
(406) 444-6601

DRAWN		
DATE	BY	
4/17/08	KJG	
REVISED		
2/2/09	BJL	
3/30/09	KJG	
APPROVED		
4/20/09	TEC	
3/30/09	STH	

DEADMAN'S BASIN TERMINAL OUTLET REPLACEMENT

Detail Sheet - Toe Drain

SHEET
D-4

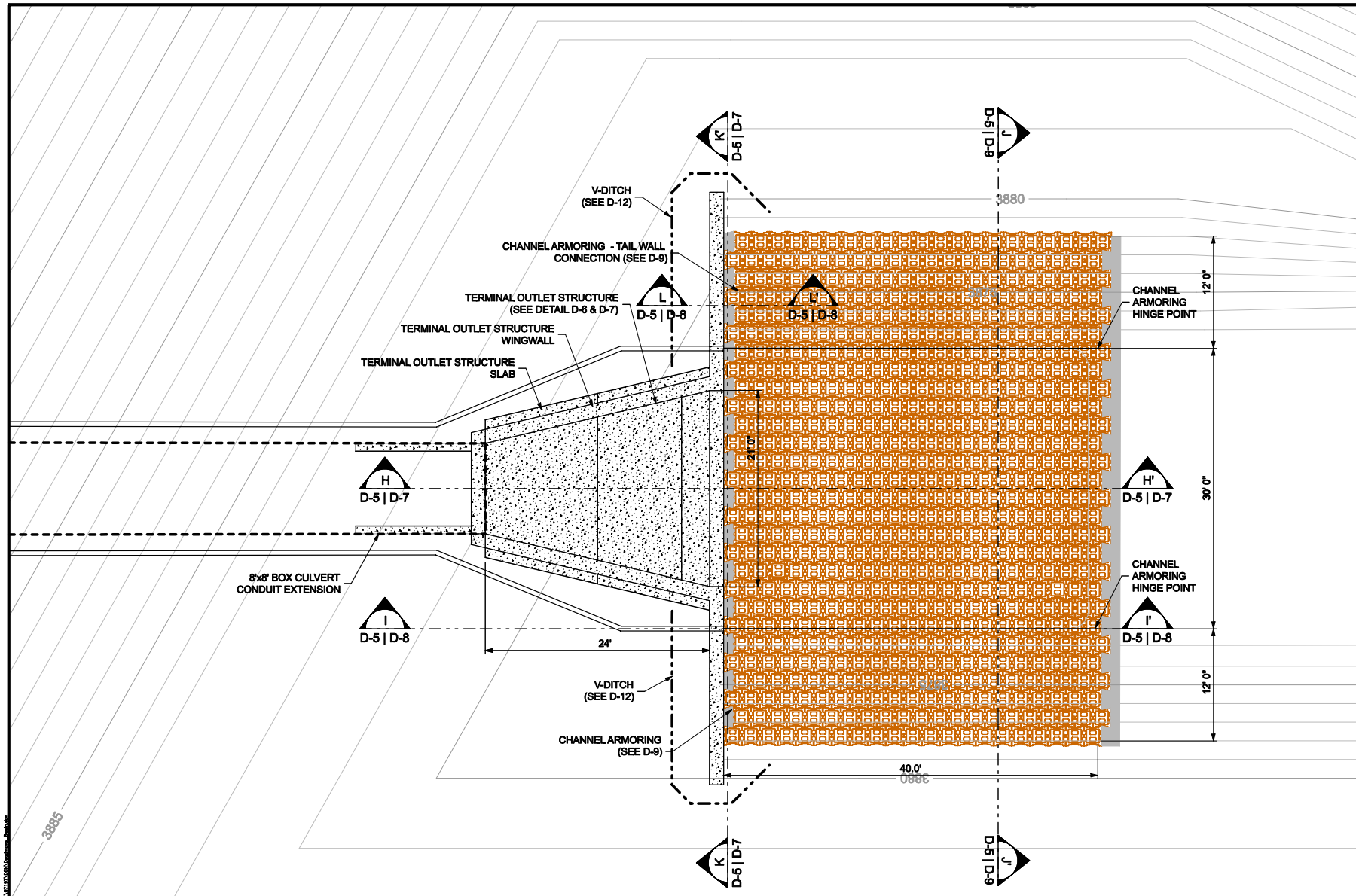

PLAN VIEW

0 5 10
(IN FEET)

NOTE:
SEE BID ALTERNATIVE FOR
GROUTED RIPRAP AS PRESENTED
IN THE PROJECT SPECIFICATIONS

MONTANA
SHAWN T. HIGLEY
No. 15101
LICENSED
PROFESSIONAL ENGINEER

WWC ENGINEERING
1275 MAPLE STREET, SUITE F
HELENA, MT 59601
(406) 443-3962

MONTANA DEPARTMENT OF NATURAL
RESOURCES & CONSERVATION
1424 9th Avenue
PO Box 201601
Helena, MT 59620-1601
(406) 444-6601

DRAWN		
DATE	BY	
4/17/08	KJG	
REVISED		
2/2/09	BLL	
3/9/09	KJG	
APPROVED		
4/17/08	STH	
4/30/08	TEC	
3/9/09	STH	

DEADMAN'S BASIN TERMINAL OUTLET REPLACEMENT

Detail Sheet - Terminal Outlet & Channel Armoring

SHEET
D-5

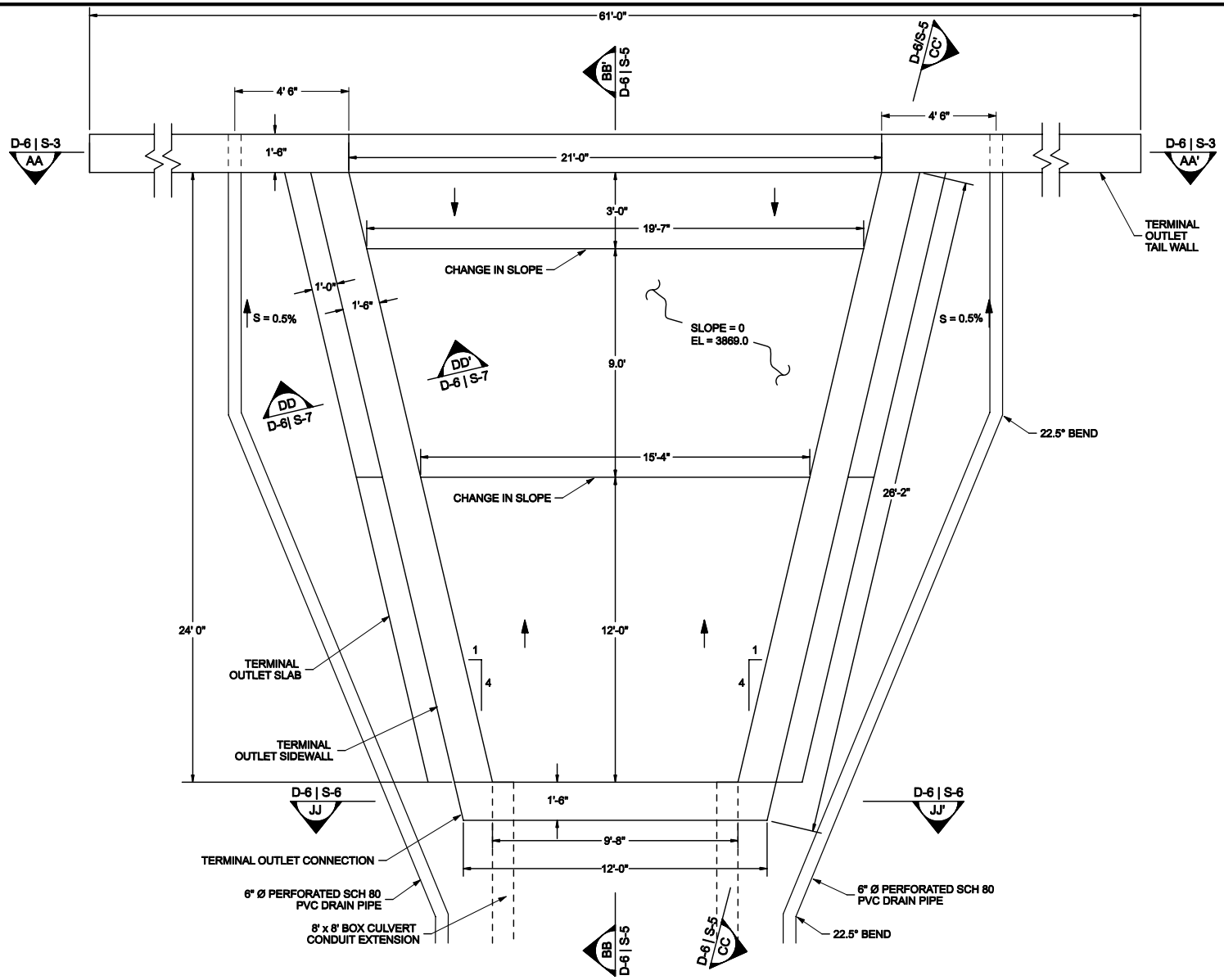

TERMINAL OUTLET BASIN DETAIL

CROSS SECTION LOCATIONS

1 0 1 2 4

(IN FEET)

MONTANA DEPARTMENT OF NATURAL RESOURCES & CONSERVATION
1424 9th Avenue
PO Box 201601
Helena, MT 59620-1601
(406) 444-6801

WWC ENGINEERING
1275 MAPLE STREET, SUITE F
HELENA, MT 59601
(406) 443-3962

DRAWN		
DATE	BY	
2/11/08	RDK	
REVISED		
2/2/09	BJL	
3/26/09	KJG	
APPROVED		
2/20/08	TEC	
3/5/09	STH	

DEADMAN'S BASIN TERMINAL OUTLET REPLACEMENT

Detail Sheet - Terminal Outlet Structure

SHEET

D-6

EL. = ELEVATION
I.E. = INVERT ELEVATION

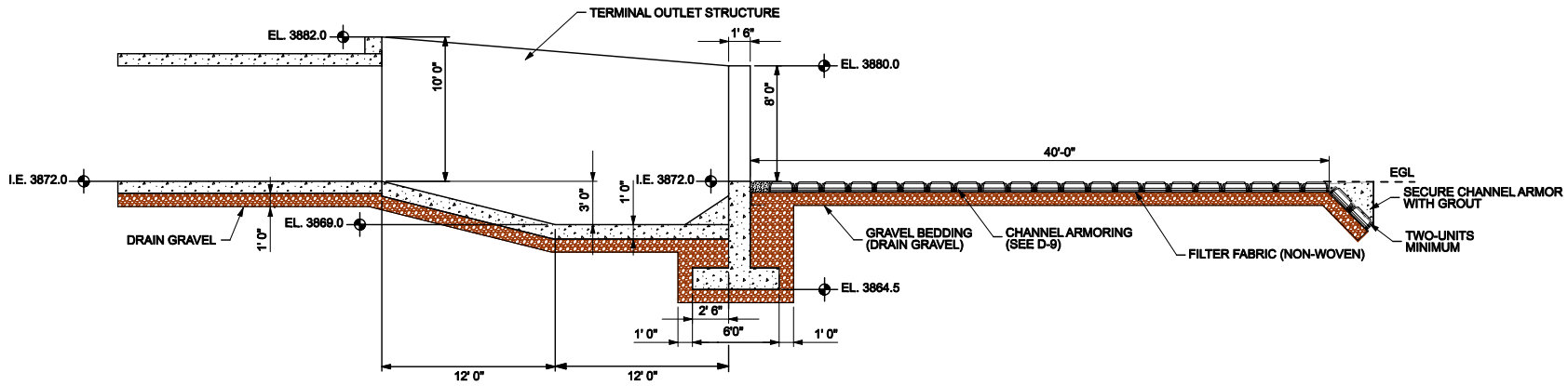

H-H'
D-5/D-7
CROSS SECTION

0 4 8
(IN FEET)

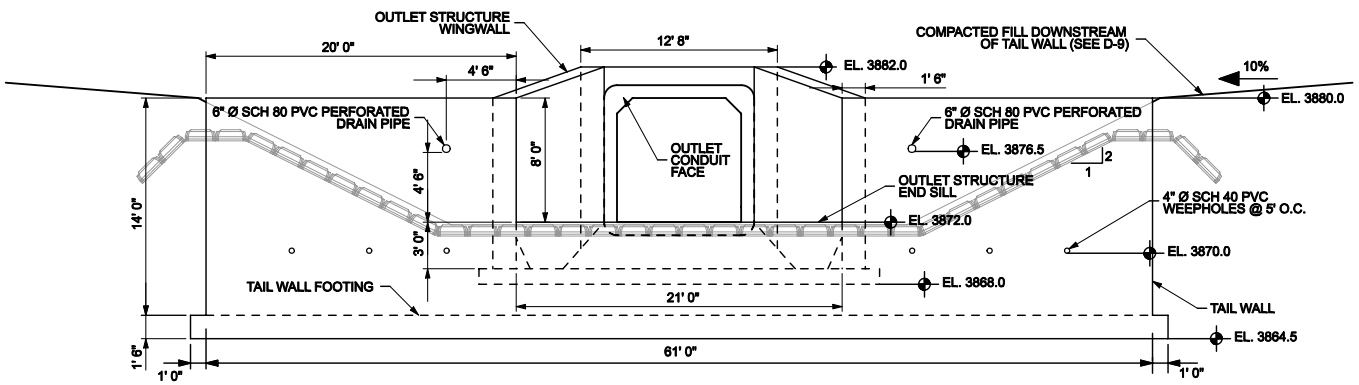

K-K'
D-5/D-7
END VIEW ELEVATION

0 4 8
(IN FEET)

WWC ENGINEERING
1275 MAPLE STREET, SUITE F
HELENA, MT 59601
(406) 443-3962

MONTANA DEPARTMENT OF NATURAL RESOURCES & CONSERVATION
1424 9th Avenue
PO Box 201601
Helena, MT 59620-1601
(406) 444-6601

DRAWN		
DATE	BY	
2/11/08	SAA	
REVISED		
2/2/09	BJL	
3/26/09	SJG	
APPROVED		
2/11/08	TEC	
2/27/08	TEC	
3/5/09	STH	

DEADMAN'S BASIN TERMINAL OUTLET REPLACEMENT

Detail Sheet - Terminal Outlet Structure

SHEET
D-7

EL. = ELEVATION
I.E. = INVERT ELEVATION

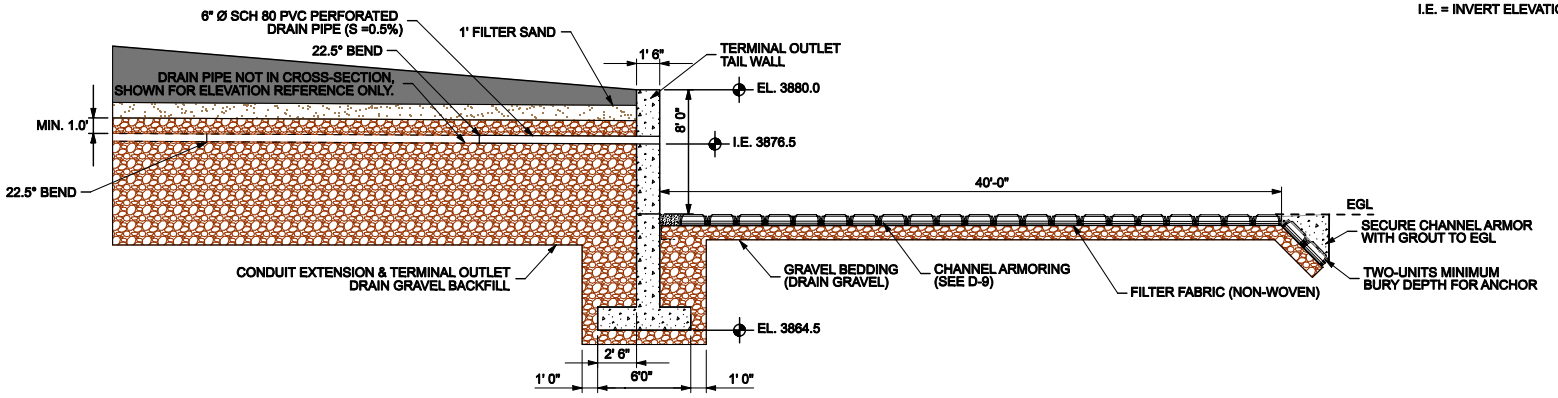

I-I' D-5 | D-8 CROSS SECTION

0 4 8
(IN FEET)

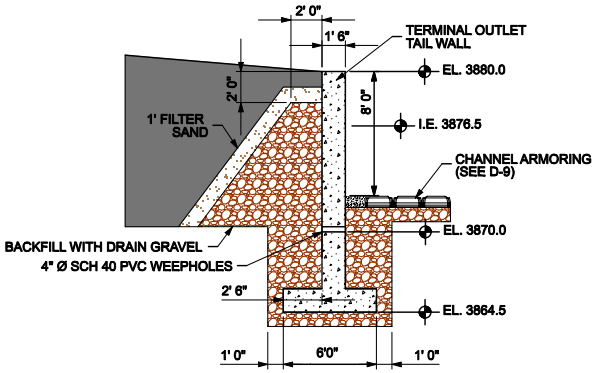

L-L' D-5 | D-8 CROSS SECTION TYPICAL BACKFILL

0 4 8
(IN FEET)

MONTANA SHAWN T. MEHLHOFF No. 18101 PROFESSIONAL ENGINEER

WWC ENGINEERING
1275 MAPLE STREET, SUITE F
HELENA, MT 59601
(406) 443-3962

MONTANA DEPARTMENT OF NATURAL RESOURCES & CONSERVATION
1424 9th Avenue
PO Box 201601
Helena, MT 59620-1601
(406) 444-6601

DRAWN	
DATE	BY
2/11/08	SAA
REVISED	
2/2/09	BJL
3/3/09	SJG
APPROVED	
2/11/08	TEC
3/3/09	STH

DEADMAN'S BASIN TERMINAL OUTLET REPLACEMENT

Detail Sheet - Terminal Outlet Structure

SHEET
D-8

2/23/2009 9:07:12 AM K:\DWG\12110\DWG\Deadman_Basin.dwg

EGL = EXISTING GROUND LINE
ACB = ARTICULATING CONCRETE BLOCK

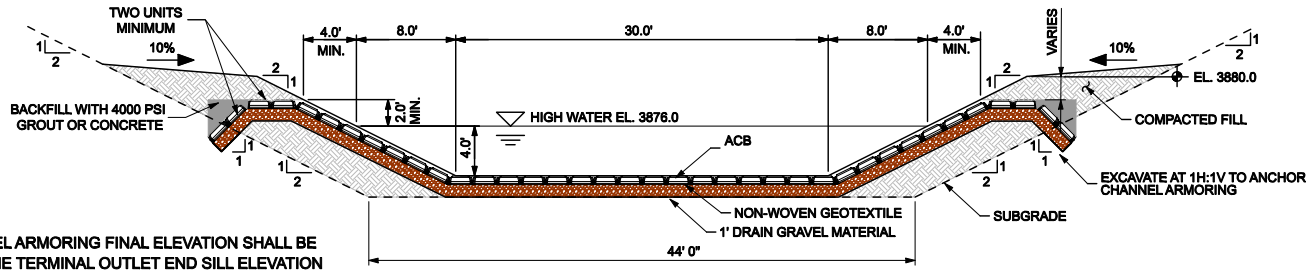

NOTES:
1) THE CHANNEL ARMORING FINAL ELEVATION SHALL BE 2" BELOW THE TERMINAL OUTLET END SILL ELEVATION OF 3872.0.
2) FILL GAPS BETWEEN SEPERATE ACB MATS & THE GAP BETWEEN THE ACB MATS AND THE TERMINAL OUTLET TAIL WALL ARE TO BE FILLED WITH 4000 PSI GROUT.
3) HOOK THE EXPOSED REVETMENT CABLE IN THE OPEN HALF BLOCKS OF THE ARTICULATING CONCRETE BLOCK MATS OVER THE #5 REINFORCING STEEL EXPOSED THROUGH THE TAIL WALL PRIOR TO BACKFILLING THESE GAPS WITH 4000 PSI GROUT.
4) CHANNEL ARMORING TO BE CLASS 50S ARMORFLEX MAT OR APPROVED EQUAL.

J-J'
D-5 | D-9

CROSS SECTION

0 5 10
(IN FEET)

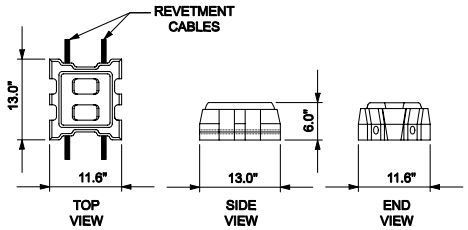

ARMORFLEX CLASS 50S DIMENSIONS
N.T.S.

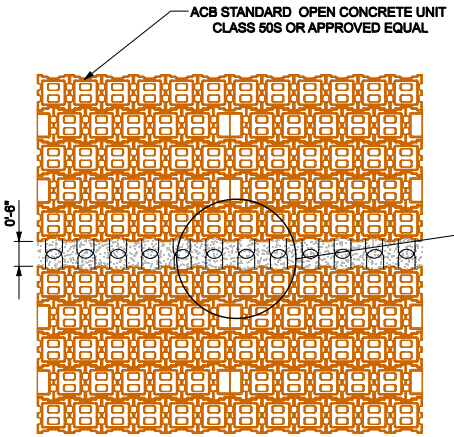

PLAN VIEW
N.T.S.

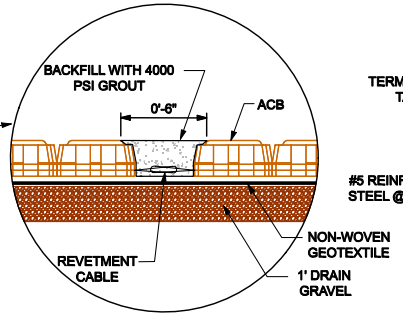

GROUT DETAIL
N.T.S.

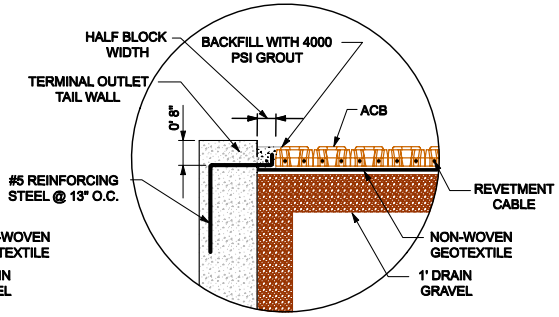

TAIL WALL - ACB CONNECTION DETAIL
N.T.S.

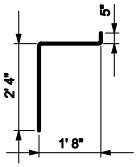

#5 REINFORCING STEEL DIMENSIONS
N.T.S.

MONTANA DAVID J. HUGHES No. 15101 PROFESSIONAL ENGINEER

WWC ENGINEERING
1275 MAPLE STREET, SUITE F
HELENA, MT 59601
(406) 443-3962

MONTANA DEPARTMENT OF NATURAL RESOURCES & CONSERVATION
1424 9th Avenue
PO Box 201601
Helena, MT 59620-1601
(406) 444-6601

DRAWN		
DATE	BY	
4/17/08	KJG	
REVISED		
3/9/09	KJG	
3/22/09	BJL	
APPROVED		
2/20/08	TEC	
3/5/09	STH	

DEADMAN'S BASIN TERMINAL OUTLET REPLACEMENT
Detail Sheet - Channel Armoring

SHEET
D-9

EGL = EXISTING GROUND LINE

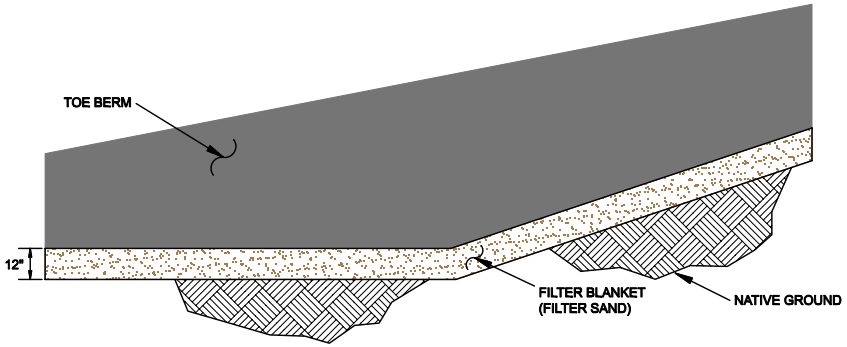

TYPICAL FILTER BLANKET DETAIL

NTS

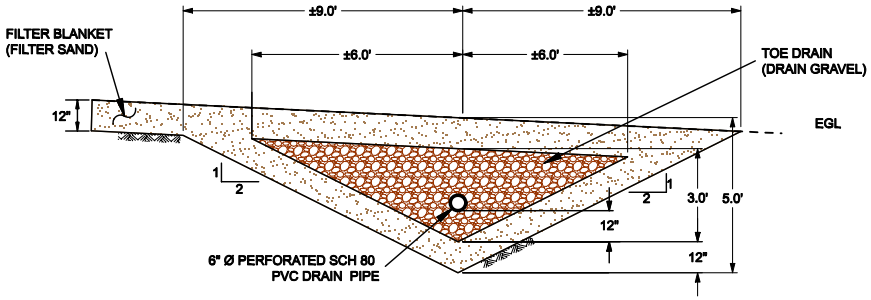

TOE DRAIN DETAIL

NTS

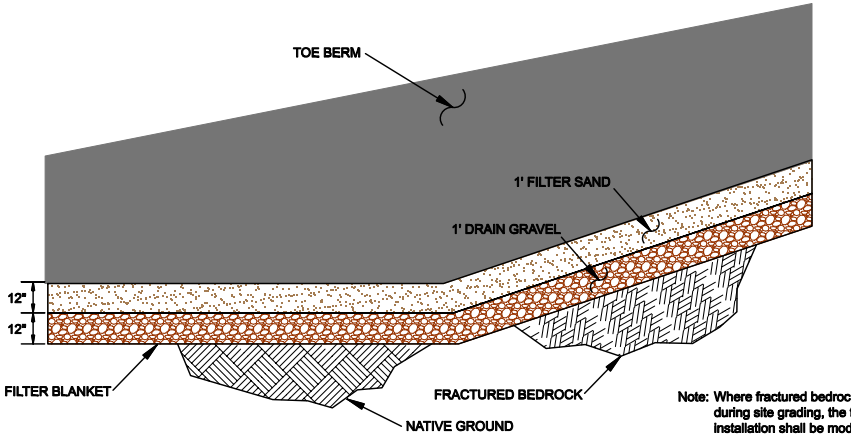

MODIFIED FILTER BLANKET DETAIL

(WHEN FRACTURED BEDROCK PRESENT)

NTS

Note: Where fractured bedrock is encountered during site grading, the typical filter blanket installation shall be modified as shown. Fractured bedrock determinations shall only be made by ENGINEER. ENGINEER shall determine the extent of modification of the filter blanket to facilitate drainage of the underlying fractured bedrock.

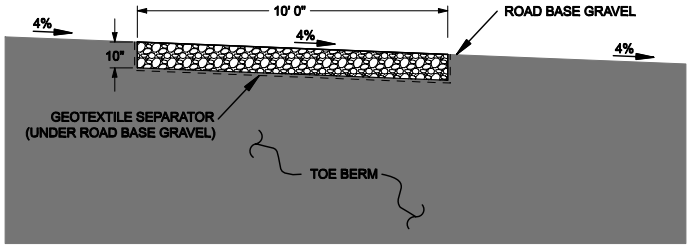

GRAVEL ACCESS ROAD DETAIL

NTS

MONTANA SHAWN M. HEALY No. 15101 PROFESSIONAL ENGINEER

WWC ENGINEERING
1275 MAPLE STREET, SUITE F
HELENA, MT 59601
(406) 443-3962

MONTANA DEPARTMENT OF NATURAL RESOURCES & CONSERVATION
1424 9th Avenue
PO Box 201601
Helena, MT 59620-1601
(406) 444-6601

DRAWN		
DATE	BY	
2/11/08	RDK	
REVISED		
2/2/09	BJL	
3/3/09	KJG	
APPROVED		
2/20/08	TEC	
3/5/08	STH	

DEADMAN'S BASIN TERMINAL OUTLET REPLACEMENT

Detail Sheet -
Toe Drain / Access Road

SHEET
D-10

2/23/2009 9:08:32 AM \\LWWC\V2110\DWG\Deadmans_Basin.dwg

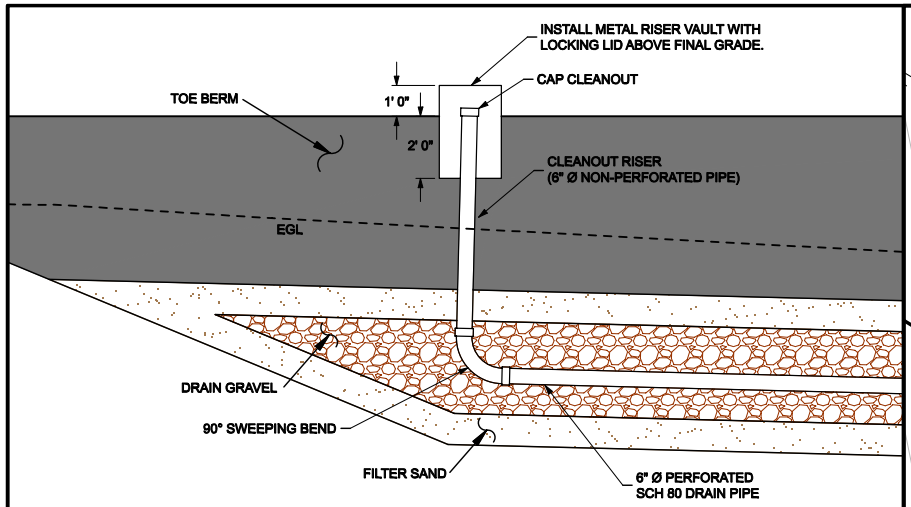

TOE DRAIN CLEANOUT

NTS

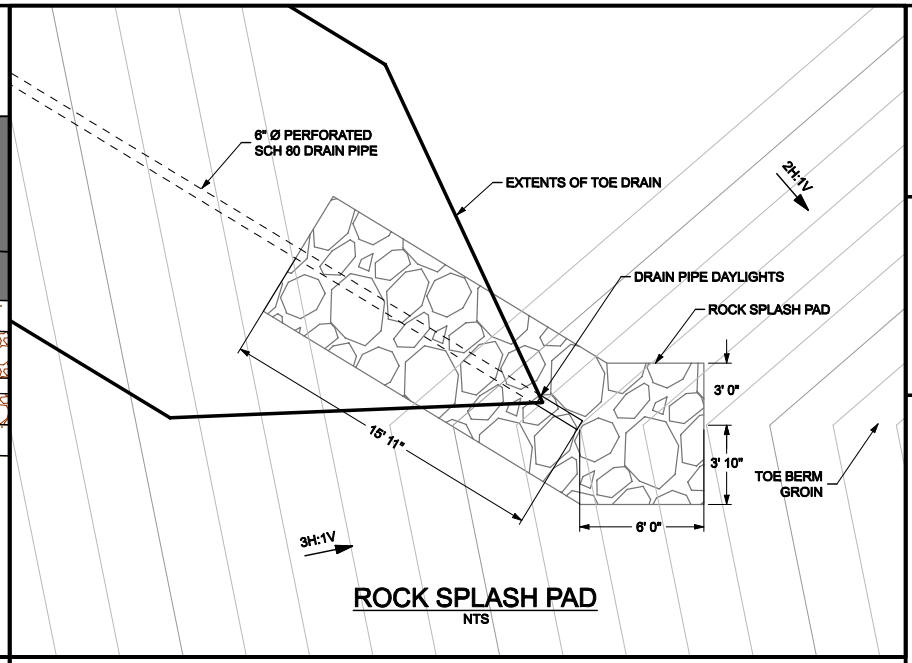

ROCK SPLASH PAD

NTS

NOTES: 1) STRIP TOPSOIL IN AREAS OF CUT & FILL PRIOR TO CONSTRUCTION. NOT SHOWN FOR CLARITY.
2) UPPER 4" OF COMPLETED SURFACE TO BE TOPSOIL.

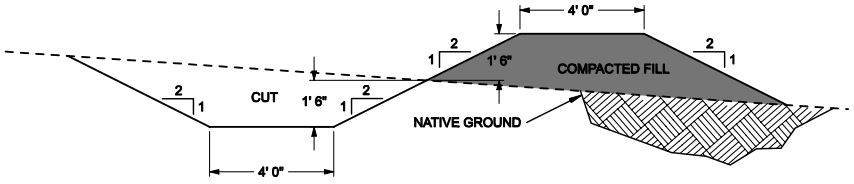

TYPICAL INTERCEPTOR DITCH CROSS-SECTION

NTS

NOTE: 1) EROSION PROTECTION MAT TO BE NORTH AMERICAN GREEN C350 OR APPROVED EQUAL.

EGL = EXISTING GROUND LINE

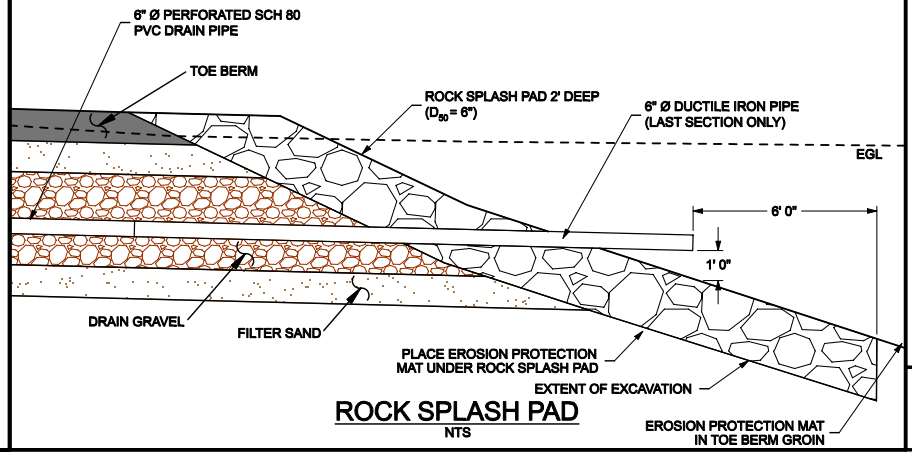

ROCK SPLASH PAD

NTS

MONTANA SHAWN M. HUNT 15101 PROFESSIONAL ENGINEER

WWC ENGINEERING
1275 MAPLE STREET, SUITE F
HELENA, MT 59601
(406) 443-3962

MONTANA DEPARTMENT OF NATURAL RESOURCES & CONSERVATION
1424 9th Avenue
PO Box 201601
Helena, MT 59620-1601
(406) 444-6601

DRAWN		
DATE	BY	
2/11/08	RDN	
REVISED		
2/2/09	BJL	
3/3/09	KJG	
APPROVED		
2/20/08	TEC	
2/20/08	TEC	
3/5/08	SHH	

DEADMAN'S BASIN TERMINAL OUTLET REPLACEMENT

Detail Sheet - Cleanouts / Splash Pad / Ditch

SHEET

D-11

J:\2312001 - 2008-32 AM - K:\DWG\12110\DTA\Deadmans_Basin.dwg

NOTES: 1) UPPER 4" OF COMPLETED SURFACE TO BE TOPSOIL.

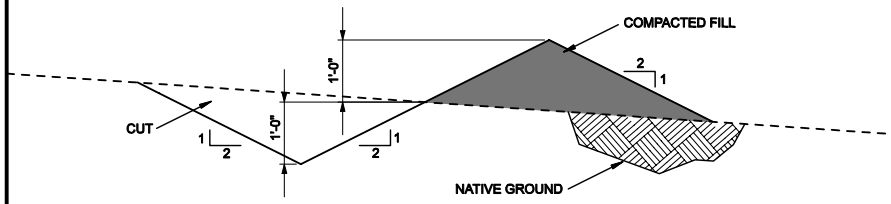

TYPICAL V-DITCH CROSS-SECTION

NTS

NOTES: 1) TRM TO BE NORTH AMERICAN GREEN C350 OR APPROVED EQUAL.

2) TRM ROLL WIDTH IS 6.5'.

TRM = TURF REINFORCEMENT MAT

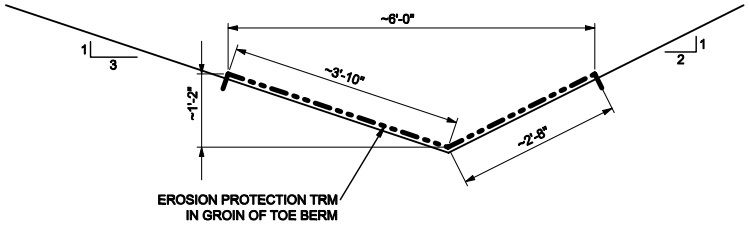

EROSION PROTECTION TRM TYPICAL SECTION

NTS

MONTANA DEPARTMENT OF NATURAL RESOURCES & CONSERVATION
1424 9th Avenue
PO Box 201601
Helena, MT 59620-1601
(406) 444-6601

WWC ENGINEERING
1275 MAPLE STREET, SUITE F
HELENA, MT 59601
(406) 443-3962

DRAWN	
DATE	BY
3/9/09	KJG
REVISED	
APPROVED	
3/9/09	STH

DEADMAN'S BASIN TERMINAL OUTLET REPLACEMENT

Detail Sheet - V-Ditch / TRM

SHEET D-12

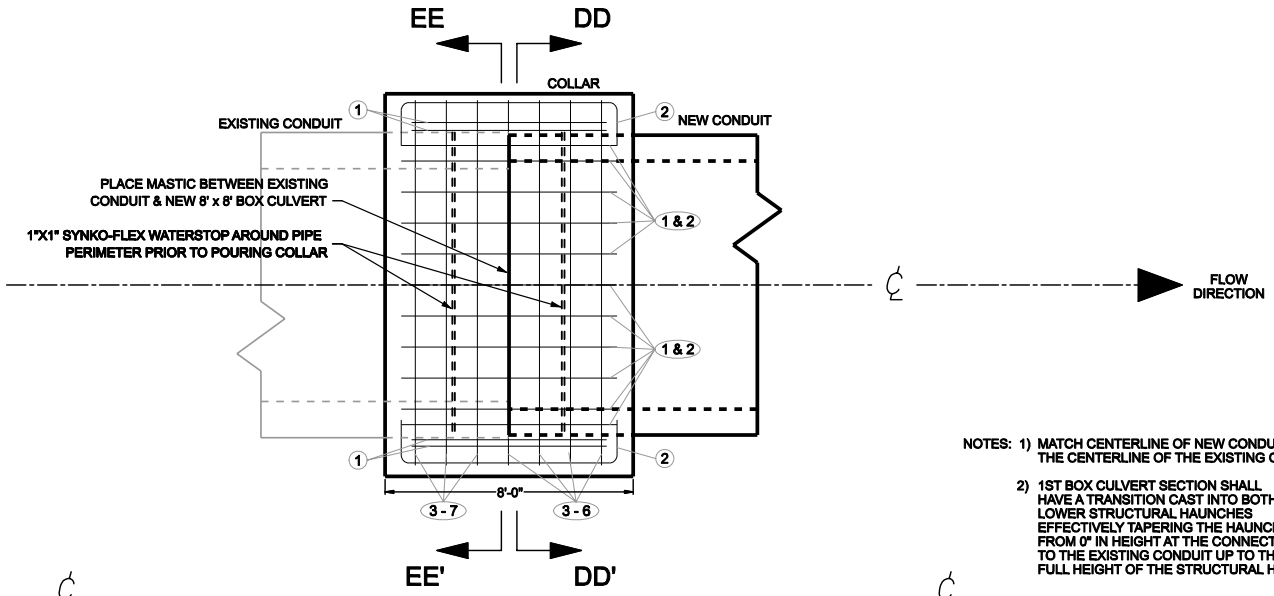

PROFILE VIEW

1 0 1 2 4
(IN FEET)

NOTES: 1) MATCH CENTERLINE OF NEW CONDUIT TO THE CENTERLINE OF THE EXISTING CONDUIT.

2) 1ST BOX CULVERT SECTION SHALL HAVE A TRANSITION CAST INTO BOTH LOWER STRUCTURAL HAUNCHES EFFECTIVELY TAPERING THE HAUNCHES FROM 0" IN HEIGHT AT THE CONNECTION TO THE EXISTING CONDUIT UP TO THE FULL HEIGHT OF THE STRUCTURAL HAUNCH.

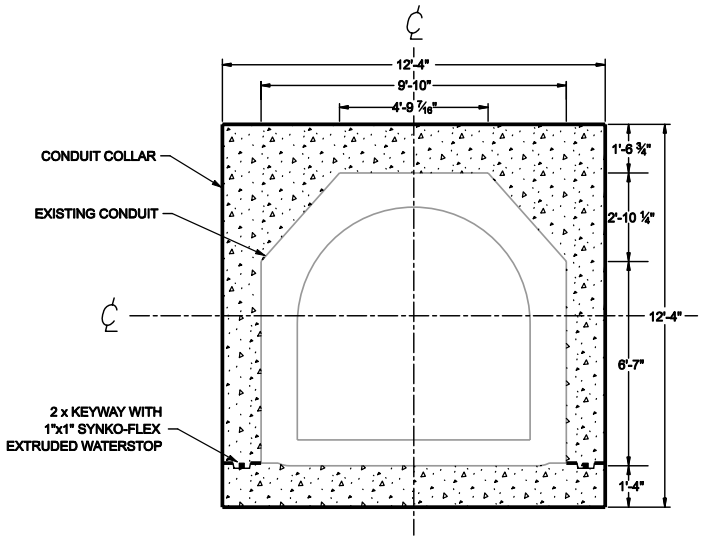

EE-EE' S-1 | S-1 CROSS SECTION EXISTING CONDUIT

1 0 1 2 4
(IN FEET)

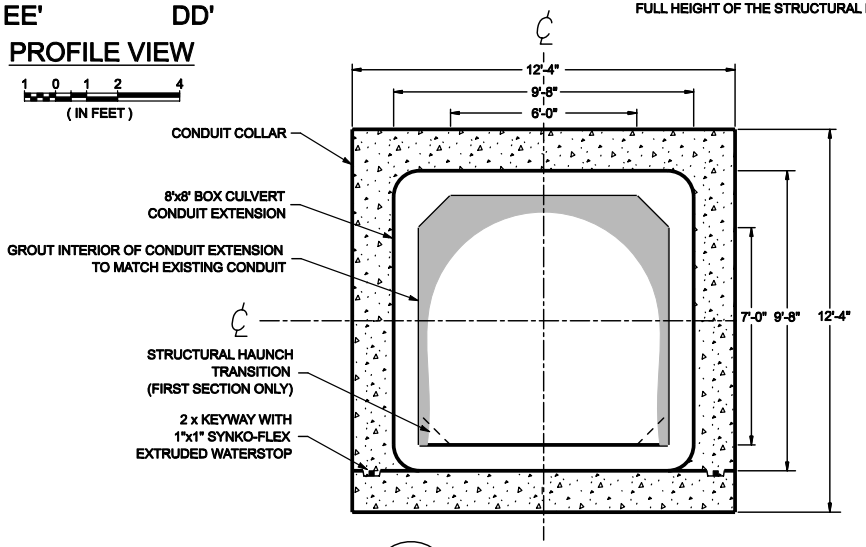

DD-DD' S-1 | S-1 CROSS SECTION NEW CONDUIT

1 0 1 2 4
(IN FEET)

MONTANA PROFESSIONAL ENGINEER
SHAWN MCCLEY
No. 15101

WWC ENGINEERING
1275 MAPLE STREET, SUITE F
HELENA, MT 59601
(406) 443-3962

MONTANA DEPARTMENT OF NATURAL RESOURCES & CONSERVATION
1424 9th Avenue
PO Box 201601
Helena, MT 59620-1601
(406) 444-6601

DRAWN		
DATE	BY	
2/11/08	RDN	
REVISED		
2/2/09	BJL	
3/26/09	SJG	
APPROVED		
2/20/08	TEC	
3/26/09	TEC	
3/30/09	SHH	

DEADMAN'S BASIN TERMINAL OUTLET REPLACEMENT

Structural Sheet - Conduit Collar

SHEET
S-1

2/23/2009 8:19:22 AM J:\CIVIL\2110\DWG\Deadman_Basin.dwg

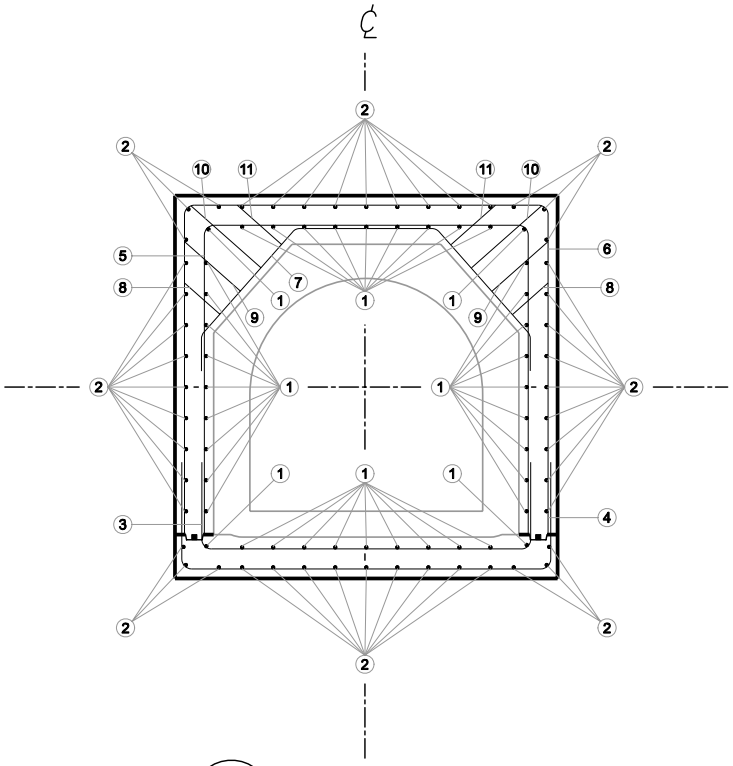

EE-EE'
S-1 | S-2
CROSS SECTION
REINFORCING STEEL
EXISTING CONDUIT

1 0 1 2 4
(IN FEET)

1. ALL REINFORCING STEEL IS #5 BARS.
2. ALL REINFORCING STEEL IS SPACED @ 12" O.C. UNLESS OTHERWISE NOTED.
3. MINIMUM CONCRETE COVER OVER REINFORCEMENT IS 3 INCHES FOR CONDUIT COLLAR.

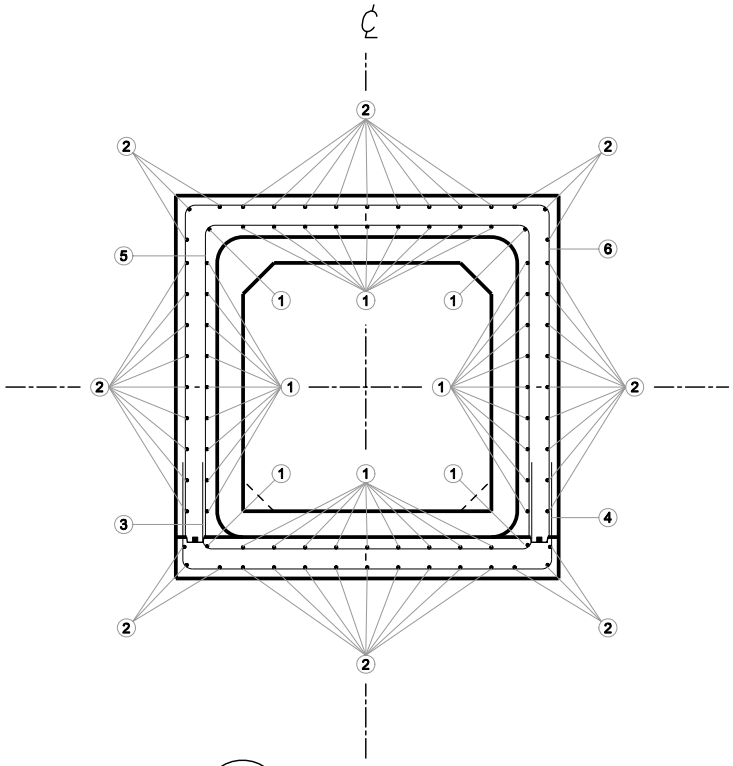

DD-DD'
S-1 | S-2
CROSS SECTION
REINFORCING STEEL
NEW CONDUIT

1 0 1 2 4
(IN FEET)

BAR TYPES
REINFORCING STEEL

STRAIGHT

TYPE 1

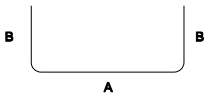

TYPE 2

TYPE 3

MINIMUM BEND DIAMETER
& LAP SPLICE LENGTH

SIZE	DIA.	BEND DIA.	SPLICE LENGTH
5	0.625"	3.75"	28"

CONDUIT COLLAR
REINFORCING STEEL SCHULE

MARK	SIZE	QUANTITY	LENGTH	TOTAL LENGTH	TYPE	A	B	C	X	Y
1	5	40	6'-4"	253'-4"	1	6'-4"	-	-	-	-
2	5	48	9'-6"	456'-0"	2	6'-10"	1'-8"	-	-	-
3	5	7	16'-0"	112'-0"	2	10'-6"	2'-9"	-	-	-
4	5	7	18'-9"	131'-3"	2	11'-9"	3'-6"	-	-	-
5	5	7	30'-2"	211'-2"	2	10'-4"	9'-11"	-	-	-
6	5	7	32'-9"	229'-3"	2	11'-7"	10'-7"	-	-	-
7	5	3	15'-11"	47'-8"	3	4'-6"	4'-6"	1'-2"	3'-1"	3'-5"
8	5	6	1-8"	10'-0"	1	1-8"	-	-	-	-
9	5	6	2'-7"	15'-6"	1	2'-7"	-	-	-	-
10	5	6	3'-3"	19'-6"	1	3'-3"	-	-	-	-
11	5	6	2'-1"	12'-6"	1	2'-1"	-	-	-	-

MONTANA PROFESSIONAL ENGINEER
SHAWN T. WEST
No. 15101
3/20/09
WWC ENGINEERING
1275 MAPLE STREET, SUITE F
HELENA, MT 59601
(406) 443-3962

MONTANA DEPARTMENT OF NATURAL RESOURCES & CONSERVATION
1424 9th Avenue
PO Box 201601
Helena, MT 59620-1601
(406) 444-6601

DRAWN	
DATE	BY
2/11/08	RDK
REVISED	
2/2/09	BJL
3/20/09	KJG
APPROVED	
2/20/08	TEC
3/20/09	TEC
3/20/09	STT

DEADMAN'S BASIN TERMINAL OUTLET REPLACEMENT
Structural Sheet - Conduit Collar

SHEET
S-2

2/21/2009 9:19:26 AM J:\PROJECTS\2110\DWG\Deadman_Basin.dwg

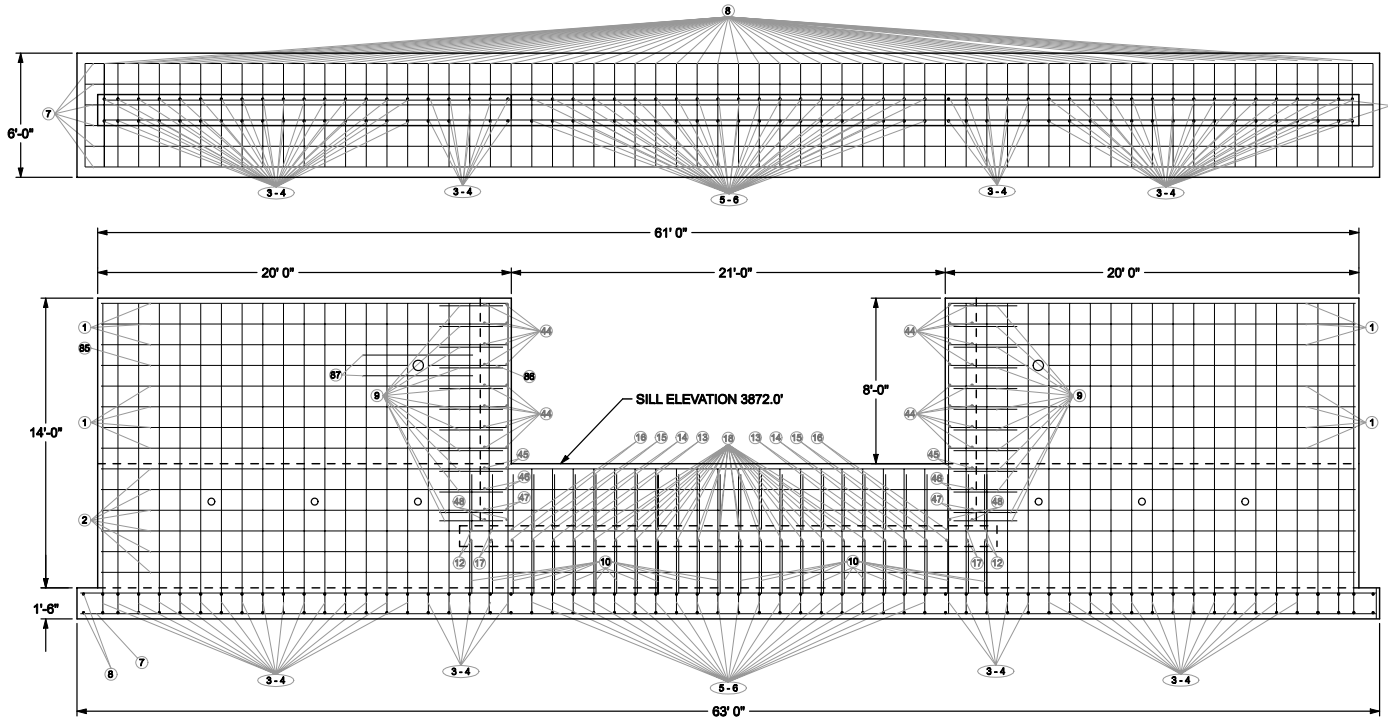

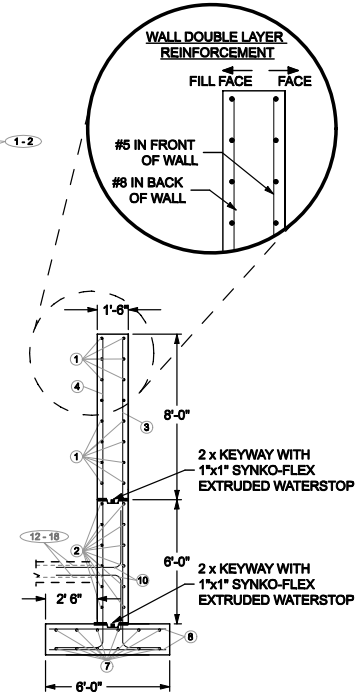

AA-AA' / D-6 | S-3 — CROSS SECTION REINFORCING STEEL

1 0 1 2 4
(IN FEET)

MINIMUM BEND DIAMETER & LAP SPLICE LENGTH

SIZE	DIA.	BEND DIA.	SPLICE LENGTH
5	0.625"	3.75"	28"
8	1.0"	6.0"	55"

NOTES:

1) #5 & #8 REINFORCING STEEL ARE SPACED @ 12" O.C.

2) REINFORCING STEEL CAN BE SPLICED AS NECESSARY. STAGGER SPLICE LOCATIONS BETWEEN PARALLEL REINFORCING STEEL.

3) MINIMUM CONCRETE COVER OVER REINFORCING STEEL SHALL BE:
   A) 3 INCHES IN BOTTOM OF FOOTINGS OR SLABS CAST AGAINST EARTH
   B) 2 INCHES IN TOP OF FOOTINGS OR SLABS
   C) 2 INCHES IN FORMED WALLS

4) REINFORCING STEEL CONNECTING PRE-CAST BOX CULVERTS TO CAST-IN-PLACE CONCRETE MAY BE PROVIDED BY THE BOX CULVERT MANUFACTURER OR DRILLED AND EPOXIED. EMBEDMENT DEPTH SHALL BE 7" INTO THE BOX CULVERT FROM THE SIDES OR TOP. EMBEDMENT DEPTH SHALL BE 12" INTO EXPOSED FACES OF THE BOX CULVERT.

TERMINAL OUTLET REINFORCING STEEL SCHULE

MARK	SIZE	QUANTITY	LENGTH	TOTAL LENGTH	TYPE	A	B	X	Y
1	5	28	19'-8"	550'-8"	1	19'-8"	-	-	-
2	5	12	60'-8"	728'-0"	1	60'-8"	-	-	-
3	5	42	16'-8"	700-0"	6	14'-11"	1'-9"	-	-
4	8	42	17'-1"	717'-6"	6	14'-11"	2'-2"	-	-
5	5	20	8'-8"	173'-4"	6	6'-11"	1'-9"	-	-
6	8	20	9'-1"	181'-8"	6	6'-11"	2'-2"	-	-
7	8	12	62'-8"	752'-0"	1	62'-8"	-	-	-
8	8	128	5'-8"	725'-4"	1	5'-8"	-	-	-
9	5	48	5'-5"	260'-0"	4	2'-7"	2'-7"	0'-8"	2'-8"
10	5	52	5'-8"	294'-8"	6	2'-7"	3'-1"	-	-
85	5	4	14'-10"	59'-4"	1	14'-10"	-	-	-
86	5	4	3'-11"	15'-8"	1	3'-11"	-	-	-
87	5	8	5'-4"	42'-8"	1	5'-4"	-	-	-

BAR TYPES REINFORCING STEEL

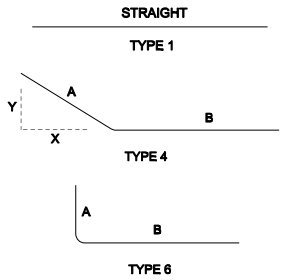

WWC ENGINEERING
1275 MAPLE STREET, SUITE F
HELENA, MT 59601
(406) 443-3962

MONTANA DEPARTMENT OF NATURAL RESOURCES & CONSERVATION
1424 9th Avenue
PO Box 201601
Helena, MT 59620-1601
(406) 444-6601

DRAWN		
DATE	BY	
2/11/08	RDN	
REVISED		
2/2/09	BJL	
3/30/09	KJG	
APPROVED		
2/2/09	TEC	
3/5/09	STH	

DEADMAN'S BASIN TERMINAL OUTLET REPLACEMENT

Structural Sheet - Terminal Outlet

SHEET
S-3

2/23/2009 9:19:43 AM J:\PROJECTS\2110\DWG\Deadman_Basin.dwg

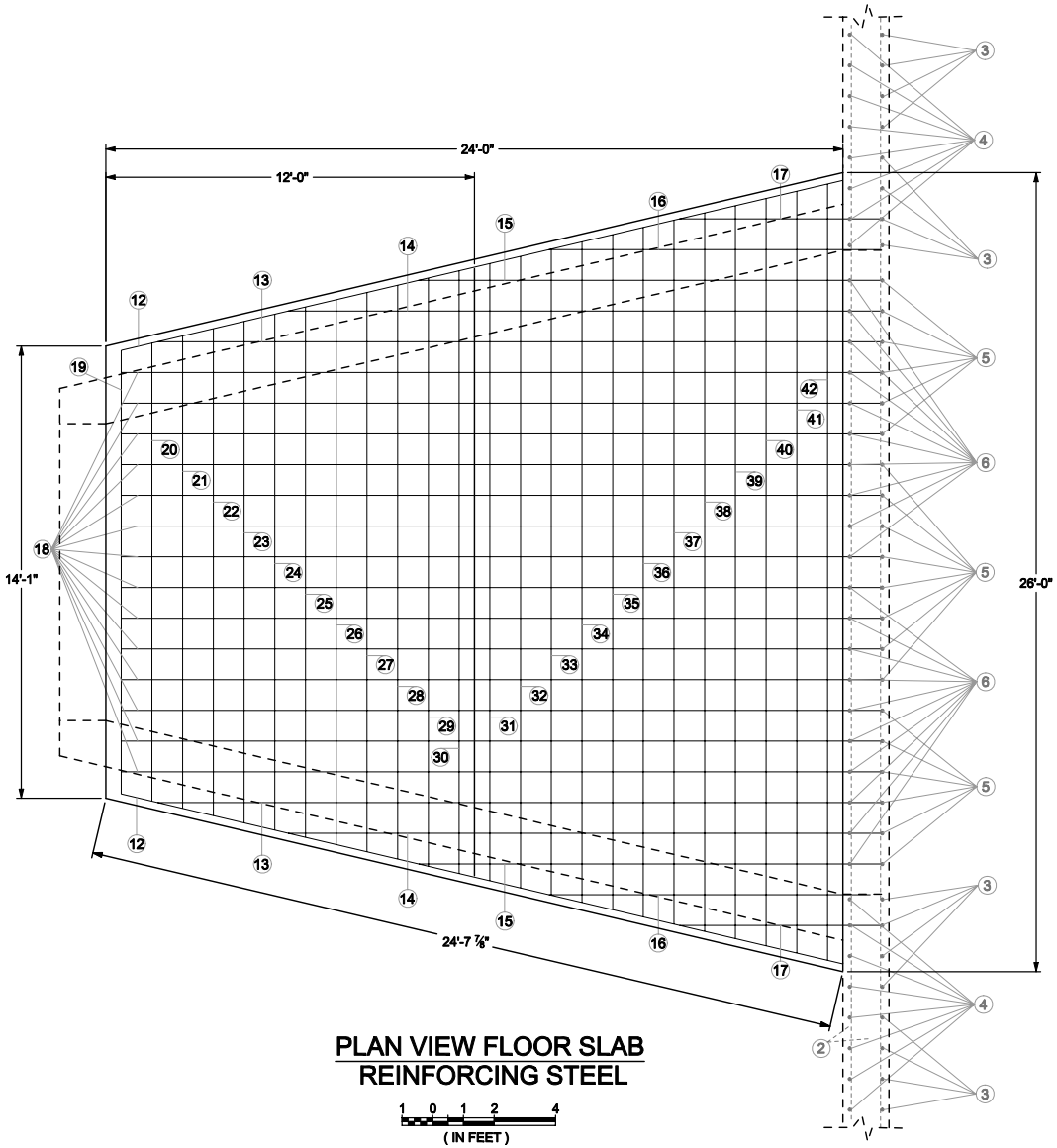

PLAN VIEW FLOOR SLAB
REINFORCING STEEL

1 0 1 2 4
(IN FEET)

TERMINAL OUTLET
REINFORCING STEEL SCHULE

MARK	SIZE	QUANTITY	LENGTH	TOTAL LENGTH	TYPE	A	B	X	Y
12	5	4	24'-6"	98'-0"	4	12'-2"	12'-4"	11'-10"	3'-0"
13	5	4	23'-11"	95'-8"	4	10'-8"	13'-3"	10'-4"	2'-7"
14	5	4	19'-6"	78'-0"	4	6'-3"	13'-3"	6'-1"	1'-6"
15	5	4	15'-1"	60'-4"	4	1'-10"	13'-3"	1'-10"	0'-5"
16	5	4	10'-10"	43'-4"	1	10'-10"	-	-	-
17	5	4	6'-7"	26'-3"	1	6'-7"	-	-	-
18	5	28	25'-2"	704'-8"	4	11'-11"	13-3"	11'-6"	3'-0"
19	5	2	14'-6"	29'-0"	1	14'-6"	-	-	-
20	5	2	14'-11"	29'-10"	1	14'-11"	-	-	-
21	5	2	15'-5"	30'-10"	1	15'-5"	-	-	-
22	5	2	15'-10"	31'-8"	1	15'-10"	-	-	-
23	5	2	16'-4"	32'-8"	1	16'-4"	-	-	-
24	5	2	16'-10"	33'-8"	1	16'-10"	-	-	-
25	5	2	17'-3"	34'-6"	1	17'-3"	-	-	-
26	5	2	17'-9"	35'-6"	1	17'-9"	-	-	-
27	5	2	18'-3"	36'-6"	1	18'-3"	-	-	-
28	5	2	18'-8"	37'-4"	1	18'-8"	-	-	-
29	5	2	19'-2"	38'-4"	1	19'-2"	-	-	-
30	5	2	19'-7"	39'-2"	1	19'-7"	-	-	-
31	5	2	20'-1"	40'-2"	1	20'-1"	-	-	-
32	5	2	20'-7"	41'-2"	1	20'-7"	-	-	-
33	5	2	21'-0"	42'-0"	1	21'-0"	-	-	-
34	5	2	21'-6"	43'-0"	1	21'-6"	-	-	-
35	5	2	22'-0"	44'-0"	1	22'-0"	-	-	-
36	5	2	22'-5"	44'-10"	1	22'-5"	-	-	-
37	5	2	22'-11"	45'-10"	1	22'-11"	-	-	-
38	5	2	23'-5"	46'-10"	1	23'-5"	-	-	-
39	5	2	23'-10"	47'-8"	1	23'-10"	-	-	-
40	5	2	24'-4"	48'-8"	1	24'-4"	-	-	-
41	5	2	24'-10"	49'-8"	1	24'-10"	-	-	-
42	5	2	25'-3"	50'-6"	1	25'-3"	-	-	-

BAR TYPES
REINFORCING STEEL

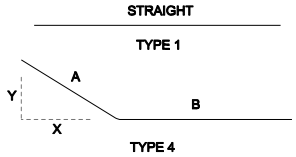

WWC ENGINEERING
1275 MAPLE STREET, SUITE F
HELENA, MT 59601
(406) 443-3962

MONTANA DEPARTMENT OF NATURAL RESOURCES & CONSERVATION
1424 9th Avenue
PO Box 201601
Helena, MT 59620-1601
(406) 444-6601

DRAWN		
DATE	BY	
2/11/08	RDK	
REVISED		
2/2/09	BJL	
3/3/09	KJG	
APPROVED		
2/2/09	TEC	
2/2/09	TEC	
3/3/09	STH	

DEADMAN'S BASIN TERMINAL OUTLET REPLACEMENT
Structural Sheet - Terminal Outlet

SHEET
S-4

2/03/2009 9:13:11 AM K:\DWG\12110\DWG\Deadman_Basin.dwg

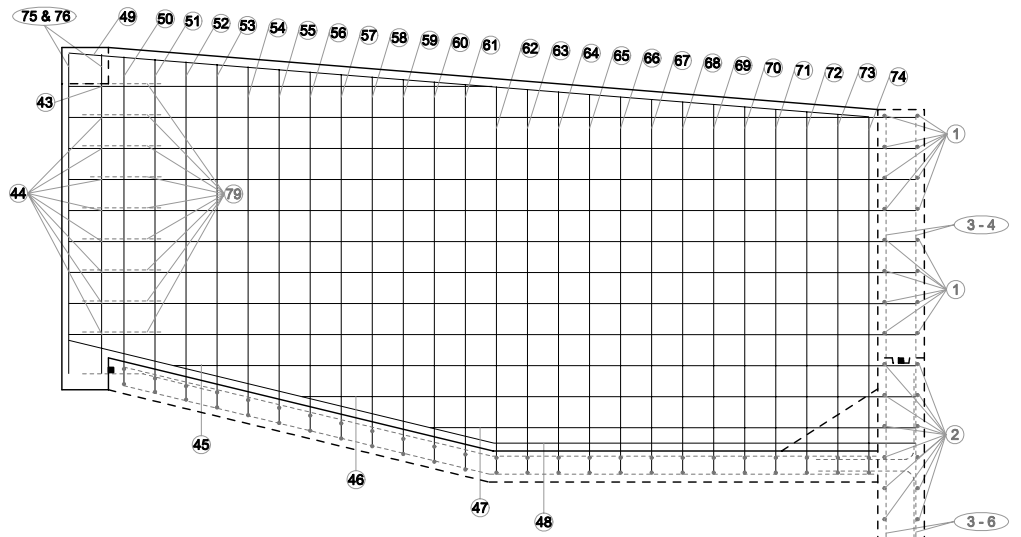

CC-CC' D-6 | S-5 CROSS SECTION REINFORCING STEEL

1 0 1 2 4
(IN FEET)

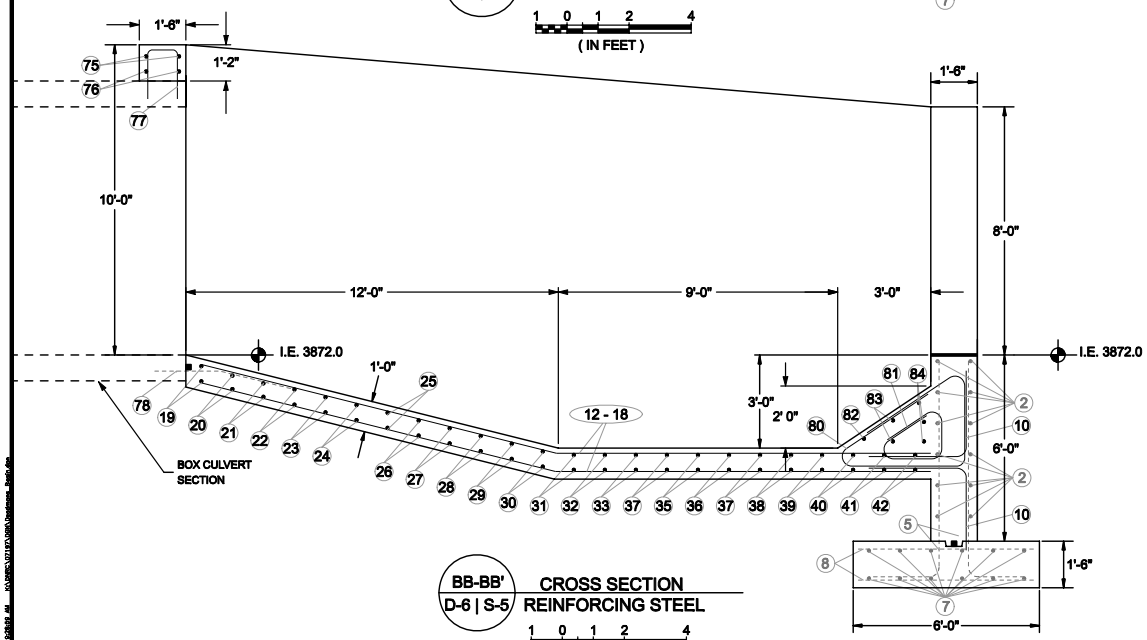

BB-BB' D-6 | S-5 CROSS SECTION REINFORCING STEEL

1 0 1 2 4
(IN FEET)

TERMINAL OUTLET REINFORCING STEEL SCHULE

MARK	SIZE	QUANTITY	LENGTH	TOTAL LENGTH	TYPE	A	B	C	X	Y
43	5	4	13'-8"	54'-8"	1	13'-8"	-	-	-	-
44	5	32	26'-2"	837'-4"	1	26'-2"	-	-	-	-
45	5	4	23'-11"	95'-8"	1	23'-11"	-	-	-	-
46	5	4	19'-9"	79'-0"	1	19'-9"	-	-	-	-
47	5	4	15'-8"	62'-8"	1	15'-8"	-	-	-	-
48	5	4	27'-8"	110'-8"	4	14'-1"	13'-7"	-	13'-9"	3'-4"
49	5 & 8	4	25'-10"	103'-4"	1	25'-10"	-	-	-	-
50	5 & 8	4	13'-7"	58'-5"	6	10'-7"	3'-0"	-	-	-
51	5 & 8	4	13'-9"	59'-1"	6	10'-9"	3'-0"	-	-	-
52	5 & 8	4	13'-11"	59'-7"	6	10'-11"	3'-0"	-	-	-
53	5 & 8	4	14'-1"	60'-5"	6	11'-1"	3'-0"	-	-	-
54	5 & 8	4	14'-2"	60'-10"	6	11'-2"	3'-0"	-	-	-
55	5 & 8	4	14'-5"	61'-7"	6	11'-5"	3'-0"	-	-	-
56	5 & 8	4	14'-7"	62'-5"	6	11'-7"	3'-0"	-	-	-
57	5 & 8	4	14'-9"	62'-11"	6	11'-9"	3'-0"	-	-	-
58	5 & 8	4	14'-11"	63'-7"	6	11'-11"	3'-0"	-	-	-
59	5 & 8	4	15'-1"	64'-5"	6	12'-1"	3'-0"	-	-	-
60	5 & 8	4	15'-3"	64'-10"	6	12'-3"	3'-0"	-	-	-
61	5 & 8	4	15'-5"	65'-7"	6	12'-5"	3'-0"	-	-	-
62	5 & 8	4	15'-6"	66'-0"	6	12'-6"	3'-0"	-	-	-
63	5 & 8	4	15'-5"	65'-7"	6	12'-5"	3'-0"	-	-	-
64	5 & 8	4	15'-4"	65'-2"	6	12'-4"	3'-0"	-	-	-
65	5 & 8	4	15'-3"	64'-11"	6	12'-3"	3'-0"	-	-	-
66	5 & 8	4	15'-2"	64'-10"	6	12'-2"	3'-0"	-	-	-
67	5 & 8	4	15'-1"	64'-5"	6	12'-1"	3'-0"	-	-	-
68	5 & 8	4	15'-0"	64'-0"	6	12'-0"	3'-0"	-	-	-
69	5 & 8	4	14'-11"	63'-7"	6	11'-11"	3'-0"	-	-	-
70	5 & 8	4	14'-10"	63'-2"	6	11'-10"	3'-0"	-	-	-
71	5 & 8	4	14'-9"	63'-1"	6	11'-9"	3'-0"	-	-	-
72	5 & 8	4	14'-8"	62'-10"	6	11'-8"	3'-0"	-	-	-
73	5 & 8	4	14'-7"	62'-5"	6	11'-7"	3'-0"	-	-	-
74	5 & 8	4	14'-6"	62'-0"	6	11'-6"	3'-0"	-	-	-
80	5	23	13'-11"	320'-1"	5	2'-11"	4'-11"	3'-11"	-	-
81	5	23	7'-11"	182'-11"	5	1'6"	2'-4"	1'-10"	-	-
82	5	1	22'-4"	22'-4"	1	22'-4"	-	-	-	-
83	8	2	22'-9"	45'-6"	1	22'-9"	-	-	-	-
84	5	3	23'-3"	69'-9"	1	23'-3"	-	-	-	-

BAR TYPES REINFORCING STEEL

STRAIGHT

TYPE 1

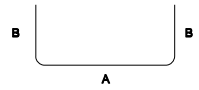

TYPE 2

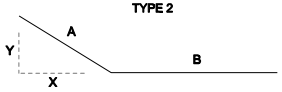

TYPE 4

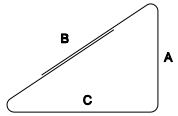

TYPE 5

WWC ENGINEERING
1275 MAPLE STREET, SUITE F
HELENA, MT 59601
(406) 443-3962

MONTANA DEPARTMENT OF NATURAL RESOURCES & CONSERVATION
1424 9th Avenue
PO Box 201601
Helena, MT 59620-1601
(406) 444-6601

DRAWN	
DATE	BY
2/11/08	RDN
REVISED	
2/2/09	BJL
3/3/09	KJG
APPROVED	
2/20/08	TEC
3/5/09	STH

DEADMAN'S BASIN TERMINAL OUTLET REPLACEMENT

Structural Sheet - Terminal Outlet

SHEET
S-5

2/23/2009 9:28:03 AM J:\PROJECTS\2110\DWG\Deadmans_Basin.dwg

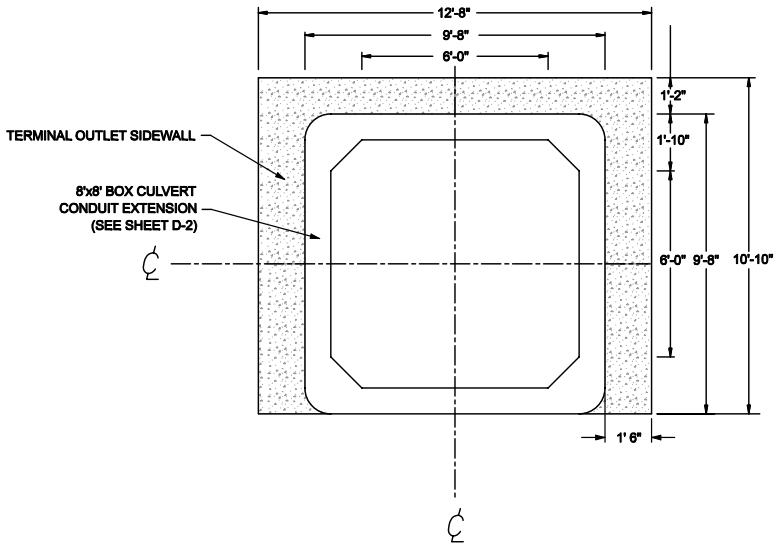

JJ-JJ'
D-6 | S-6

CROSS SECTION
TERMINAL OUTLET CONNECTION

1 0 1 2 4
(IN FEET)

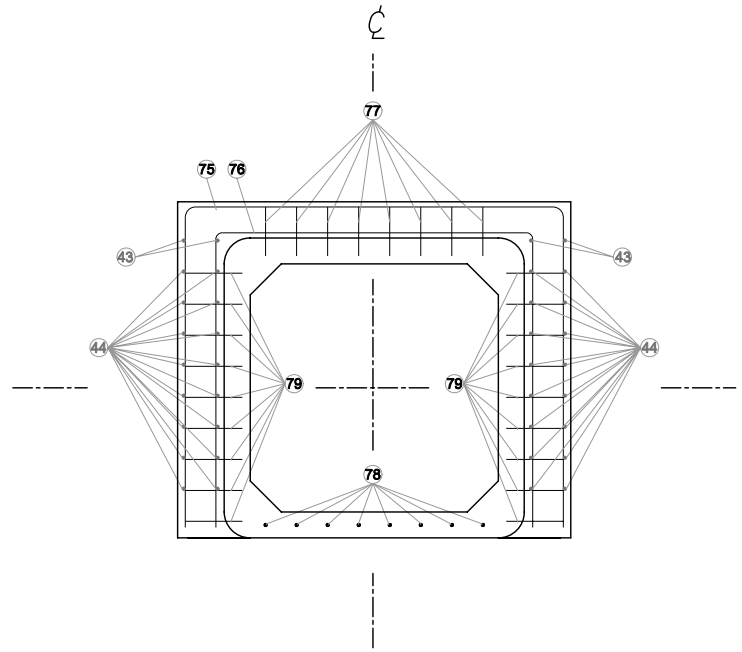

JJ-JJ'
D-6 | S-6

CROSS SECTION
REINFORCING STEEL

1 0 1 2 4
(IN FEET)

BAR TYPES
REINFORCING STEEL

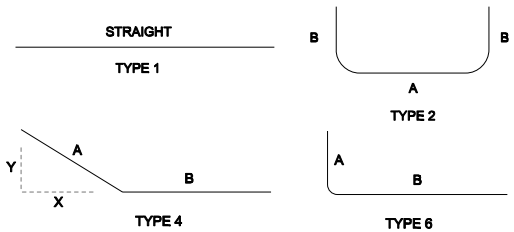

TERMINAL OUTLET CONNECTION
REINFORCING STEEL SCHULE

MARK	SIZE	QUANTITY	LENGTH	TOTAL LENGTH	TYPE	A	B	X	Y
75	8	2	30'-10"	65'-8"	2	21'-2"	10'-4"	-	-
76	5	2	29'-3"	58'-6"	2	10'-3"	9'-6"	-	-
77	5	8	3'-2"	25'-4"	2	1'-0"	1'-7"	-	-
78	5	8	4-5"	35'-4"	4	2'-1"	2'-4"	2'-3"	0'-7"
79	5	18	4'-2"	150'-0"	4	1'-6"	2'-8"	4"	1'-6"

MONTANA
RHAVN T. HUNT
No. 15101
PROFESSIONAL ENGINEER
6/26/09

WWC ENGINEERING
1275 MAPLE STREET, SUITE F
HELENA, MT 59601
(406) 443-3962

MONTANA DEPARTMENT OF NATURAL RESOURCES & CONSERVATION
1424 9th Avenue
PO Box 201601
Helena, MT 59620-1601
(406) 444-6601

DRAWN	
DATE	BY
4/30/08	KJG
REVISED	
2/2/09	BJL
3/3/09	KJG
APPROVED	
1/27/09	SHT
3/3/09	SHT

DEADMAN'S BASIN TERMINAL OUTLET REPLACEMENT
Structural Sheet - Terminal Outlet

SHEET
S-6

3/03/2009 9:13:32 AM K:\DWG\12110\DTA\Deadmans_Basin.dwg

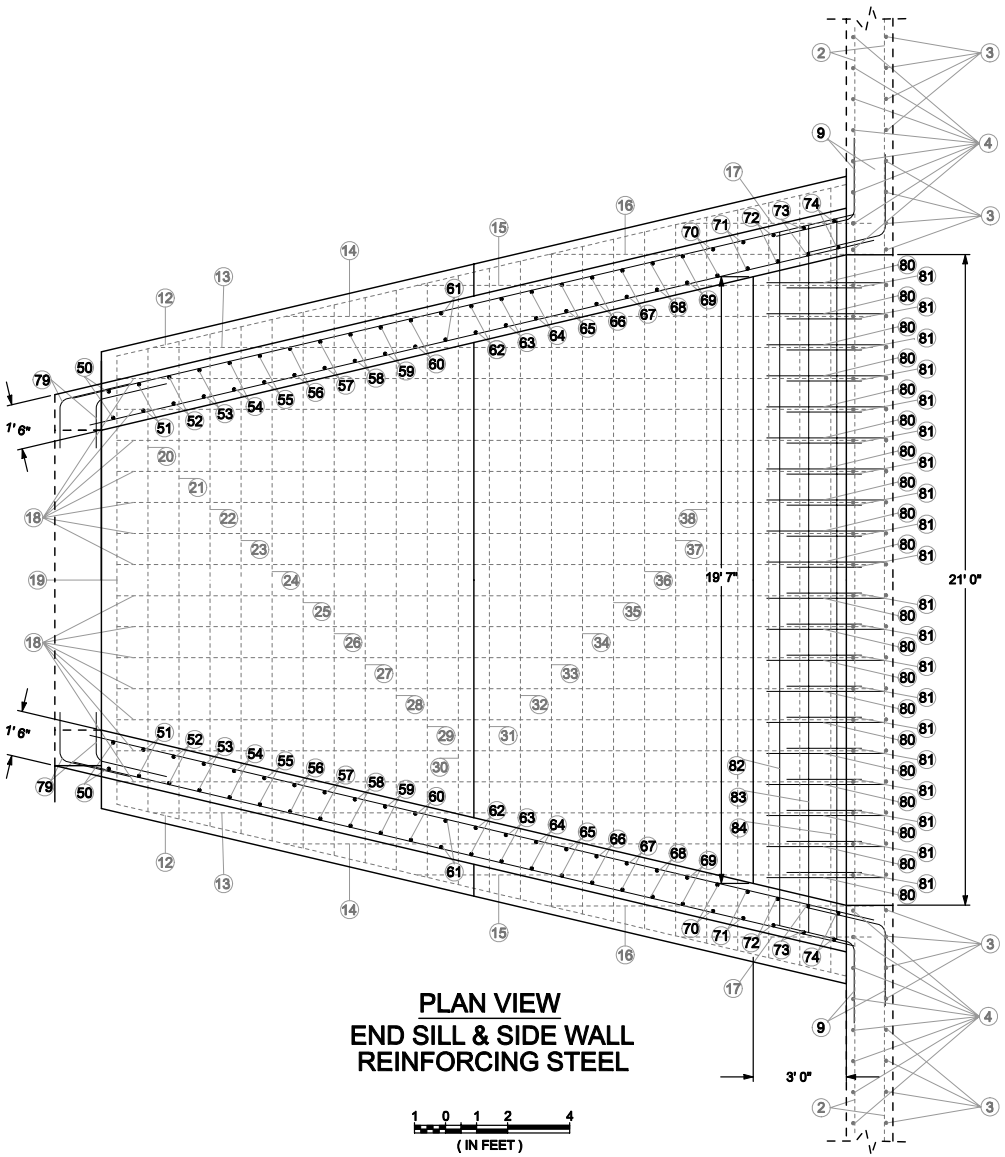

PLAN VIEW
END SILL & SIDE WALL REINFORCING STEEL

1 0 1 2 4
(IN FEET)

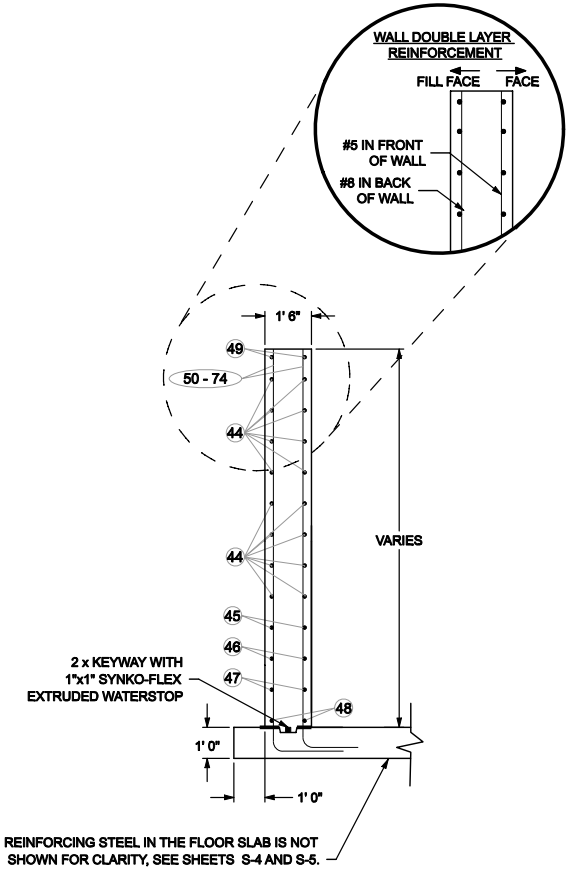

DD-DD' / D-6 | S-7 CROSS SECTION REINFORCING STEEL

1 0 1 2 4
(IN FEET)

MONTANA
SHAWN T. NIGLEY
No. 15101
LICENSED
PROFESSIONAL ENGINEER

WWC ENGINEERING
1275 MAPLE STREET, SUITE F
HELENA, MT 59601
(406) 443-3962

MONTANA DEPARTMENT OF NATURAL RESOURCES & CONSERVATION
1424 9th Avenue
PO Box 201601
Helena, MT 59620-1601
(406) 444-6601

DRAWN		
DATE	BY	
4/30/08	KJG	
REVISED		
2/2/09	BLL	
3/9/09	KJG	
APPROVED		
4/30/08	STH	
3/9/09	STH	

DEADMAN'S BASIN TERMINAL OUTLET REPLACEMENT
Structural Sheet - Terminal Outlet

SHEET
S-7